Chapter 14

Working with Sheetmetal Components

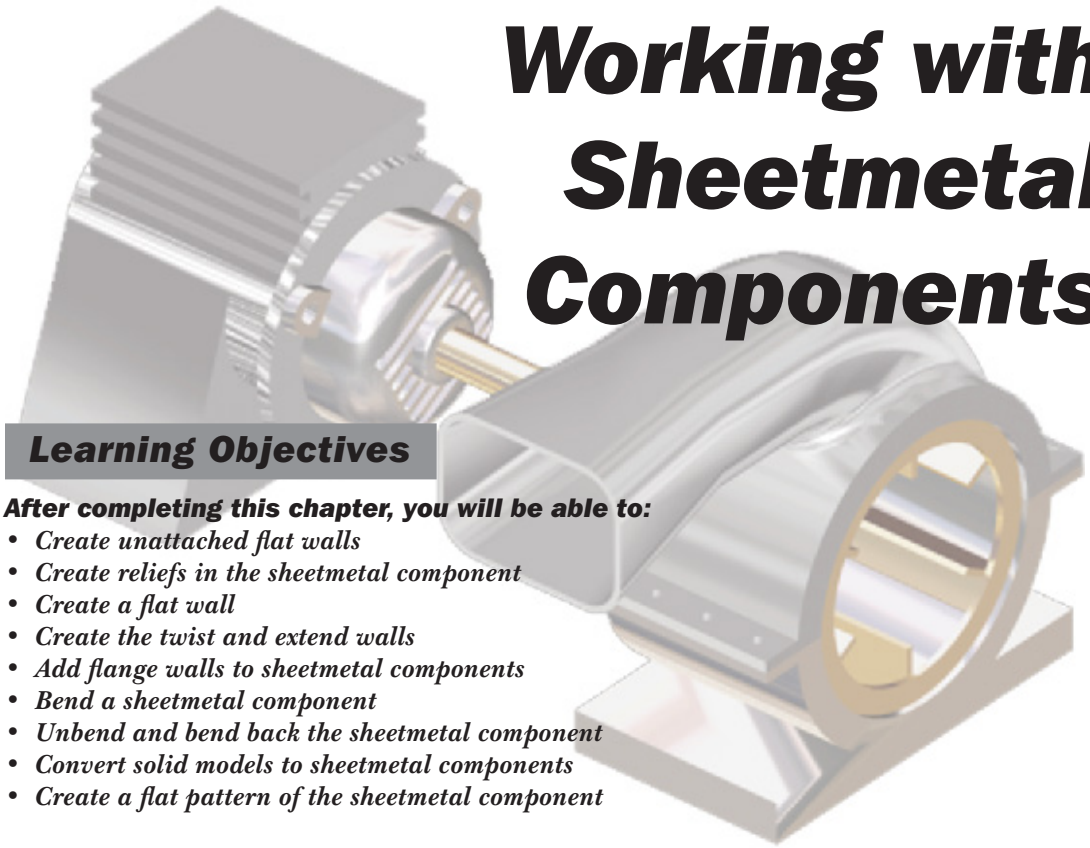

Learning Objectives

After completing this chapter, you will be able to:

- *Create unattached flat walls*
- *Create reliefs in the sheetmetal component*
- *Create a flat wall*
- *Create the twist and extend walls*
- *Add flange walls to sheetmetal components*
- *Bend a sheetmetal component*
- *Unbend and bend back the sheetmetal component*
- *Convert solid models to sheetmetal components*
- *Create a flat pattern of the sheetmetal component*

INTRODUCTION TO SHEETMETAL

A sheetmetal component is created by bending, cutting, or deforming a thin sheet of uniform thickness. The sheetmetal designs are created in the **Sheetmetal** mode of Creo Parametric. The **Sheetmetal** mode provides you the options to create primary and secondary walls and convert a solid model into a sheetmetal component.

INVOKING THE SHEETMETAL MODE

To invoke the **Sheetmetal** mode, choose the **New** button from the **Quick Access** toolbar; the **New** dialog box will be displayed. In this dialog box, the **Part** radio button in the **Type** area and the **Solid** radio button in the **Sub-type** area are selected by default. Select the **Sheetmetal** radio button from the **Sub-type** area, as shown in Figure 14-1. Enter the name of the file in the **File name** edit box and choose the **OK** button from the **New** dialog box; the **Sheetmetal** mode will be invoked.

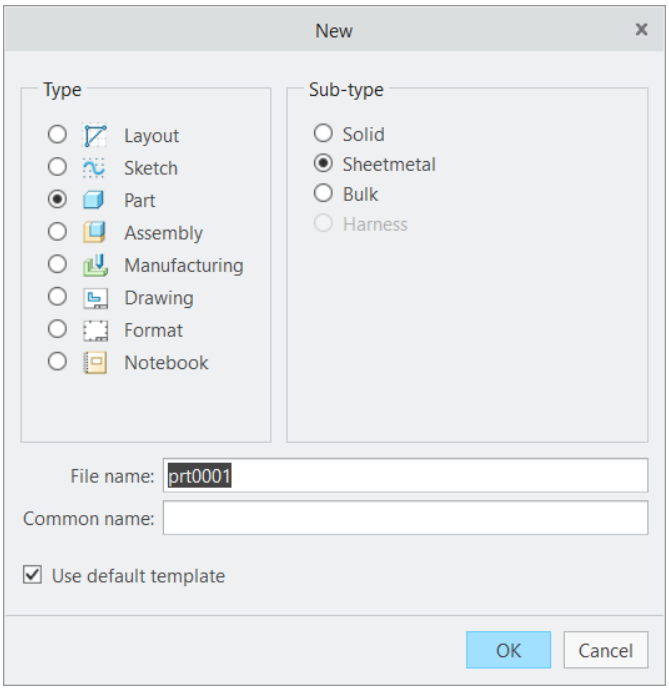

Figure 14-1 *The type and sub-type specified in the* ***New*** *dialog box*

The initial screen appearance in the **Sheetmetal** mode is shown in Figure 14-2. The initial screen appearance in the **Sheetmetal** mode is similar to the initial screen appearance in the **Part** mode. The three default datum planes, **FRONT**, **TOP**, and **RIGHT** will be displayed in the drawing area. These datum planes are mutually perpendicular to each other. The **Model Tree** will be displayed at the left of the drawing area.

The process of creating sheetmetal components is similar to that of creating solid or surface protrusions. You first need to create the sketch of the base feature and then use various tools such as **Flat**, **Flange**, and so on to create sheetmetal components.

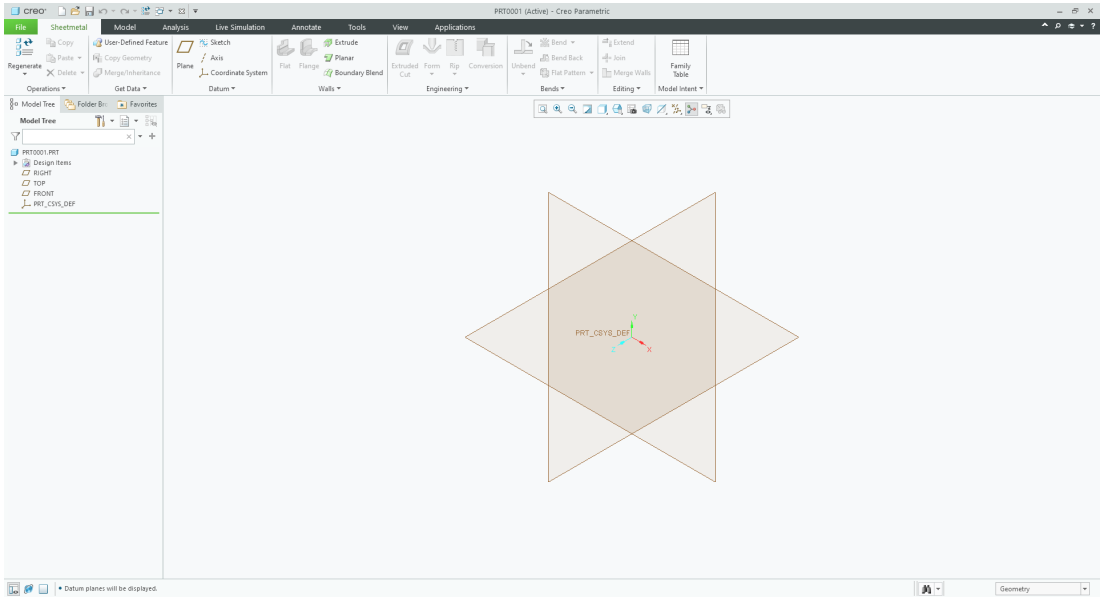

Figure 14-2 *The initial screen appearance in the* ***Sheetmetal*** *mode*

INTRODUCTION TO SHEETMETAL WALLS

A wall is defined as any planar section in a sheetmetal design. There are two types of walls in **Sheetmetal mode** of Creo Parametric. They are discussed next.

Primary Walls

Primary walls are created as base features and are independent entities. The different type of primary walls are unattached flat wall, unattached extruded wall, revolved wall, blended wall, offset wall, and so on.

Secondary Walls

Secondary walls are the walls that are dependent on at least one primary wall. They share a parent-child relation with the primary walls. Secondary walls include all the primary walls and also walls such as flat wall, flange wall, extend wall, twist wall, and so on.

To design a part from scratch, you need to create the primary wall as the base feature. The other features such as flange wall, extend wall, and so on can then be created with reference to the primary walls.

Creating the Planar Wall

Ribbon: Sheetmetal > Walls > Planar

The first feature created in a sheetmetal design is the base feature. This base feature is known as the unattached flat wall. To create a planar wall, choose the **Planar** tool from the **Walls** group of the **Ribbon**; the **Planar** dashboard will be displayed, as shown in Figure 14-3. Options in this dashboard are discussed next.

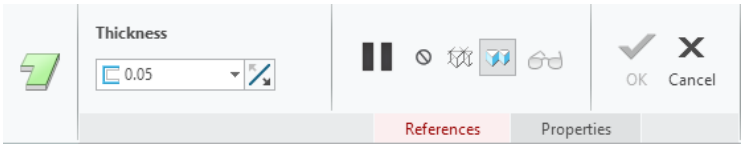

*Figure 14-3 Partial view of the **Planar** dashboard*

References Tab

When you choose the **References** tab, a slide-down panel will be displayed, as shown in Figure 14-4. This slide-down panel helps you to select the sketching plane to create the sketch. Choose the **Define** button to display the **Sketch** dialog box. Select the required sketching plane and orient it. Once you enter the sketcher environment, you need to create the sketch for the wall and then choose the **OK** button to exit the sketcher environment. Next, enter the thickness of the sheet in the **Thickness** edit box in the **Planar** dashboard. Finally, choose the **OK** button to complete the creation of the unattached flat wall. Figure 14-5 shows a sheetmetal model created using this method.

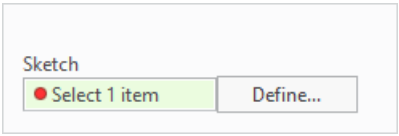

*Figure 14-4 The **References** slide-down panel*

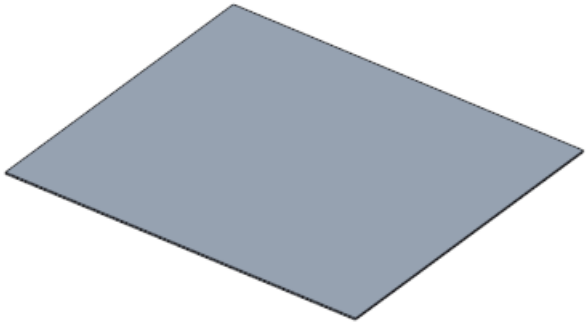

Figure 14-5 Model of the unattached flat wall

Properties Tab

When you choose the **Properties** tab, a slide-down panel will be displayed. This slide-down panel displays the feature identity in the **Name** collector. The **i** button in the slide-down panel, when chosen, opens the browser that displays all information about the feature you are creating.

Note

*The **Options** tab will not be enabled when you are creating the unattached planar wall or any other primary wall. It will be enabled only when the secondary walls are being created.*

Creating the Unattached Revolve Wall

Ribbon: Sheetmetal > Walls > Revolve

The unattached revolve wall is a feature created by revolving a sketched section about a centerline. The revolve wall can be a primary or secondary wall. When you choose the **Revolve** tool from the expanded **Walls** group, the **Revolve** dashboard will be displayed, as shown in Figures 14-6.

Tip

*1. You can move tools from the expanded **Walls** group to the Ribbon by right-clicking on the desired tool and then choosing the **Move to Group** option from the shortcut menu.*

*2. You can also move tools from the **Walls** group to the expanded **Shapes** group by right-clicking on the desired tool and then choosing the **Move to Overflow** option from the shortcut menu.*

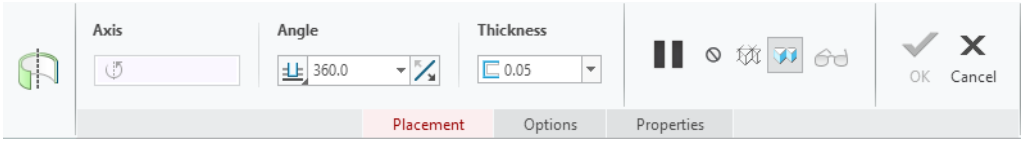

Figure 14-6 *Partial view of the **Revolve** dashboard*

The method of creating a revolve wall is same as of creating a revolve feature, refer to Chapter 4. The section for creating the revolve wall can be closed or open. When you choose the **Options** tab in the dashboard, a slide-down panel will be displayed, as shown in Figure 14-7. Some of the options in this tab are the same as for the **Revolve** feature. The sheetmetal options available in this slide-down panel are discussed next.

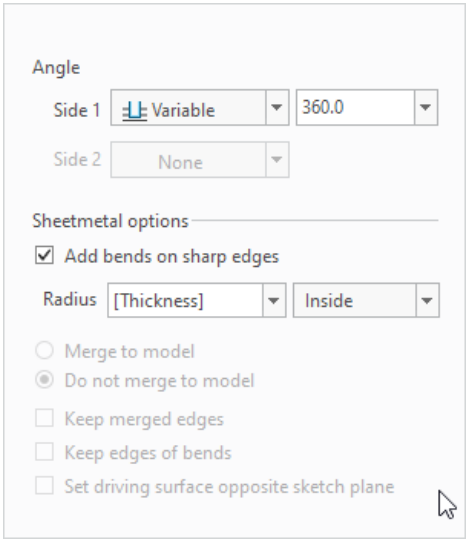

Figure 14-7 *The **Options** slide-down panel*

Add bends on sharp edges

The **Add bends on sharp edges** check box is used to add rounds on the sharp edges. On selecting this check box, the **Radius** drop-down list gets activated. Using the left drop-down list, you can specify the radius value of rounds, and using the right drop-down list, you can specify the location of rounds.

Set driving surface opposite sketch plane

The **Set driving surface opposite sketch plane** check box is used to flip the driving surface. This option will be available only when you select the **Do not merge to model** radio button.

Keep merged edges

The **Keep merged edges** check box is used to merge the revolve surface with the existing walls. This option will be available when you select the **Merge to model** radio button. If you want to keep the edges merged with the existing wall, then you need to select the **Keep merged edges** check box.

Figure 14-8 shows a closed sketch for creating the revolve wall and Figure 14-9 shows the resulting unattached revolved wall.

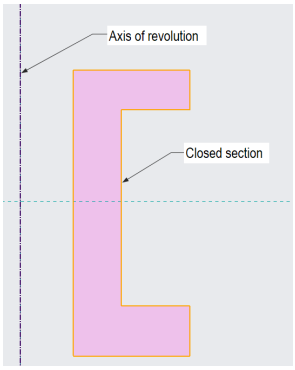

Figure 14-8 *Closed sketch for creating the revolved wall*

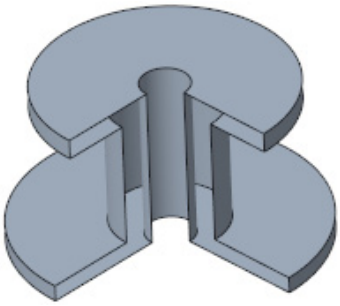

Figure 14-9 *Resulting unattached revolved wall*

Creating the Unattached Blend Wall

Ribbon: Sheetmetal > Walls > Blend

The **Blend** option connects two or more sections by combining the characteristics of each section. The number of entities in each section of the unattached blend wall should be the same. For example, you cannot blend a circle with a rectangle. This is because a rectangle is made up of four entities, whereas a circle is made up of only one entity. Therefore, these two sections can be blended only if the circle is divided into four entities.

The **Blend** option is used where the component to be created has varying cross-sections. To invoke this option, choose the **Blend** tool from the expanded **Walls** group; the **Blend** dashboard is displayed, as shown in Figure 14-10. The options in this dashboard are discussed next.

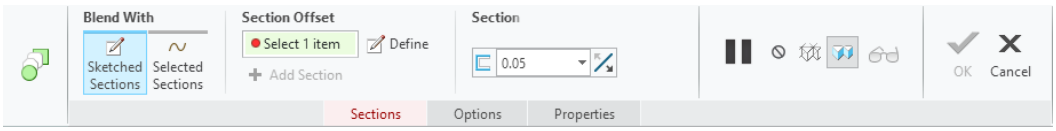

Figure 14-10 *Partial view of the* ***Blend*** *dashboard*

Sketched Sections

This button is used to create sketches in the drawing area to create the blend. The options for inserting sketches are available in the **Sections** tab that is discussed later in this chapter.

Selected Sections

This button is used to select sketches available in the drawing area to form the blend. The options for inserting sketches are available in the **Sections** tab.

Sections Tab

When you choose the **Sections** tab from the dashboard, the **Sections** slide-down panel will be displayed, as shown in Figure 14-11. This panel has two radio buttons that are discussed next.

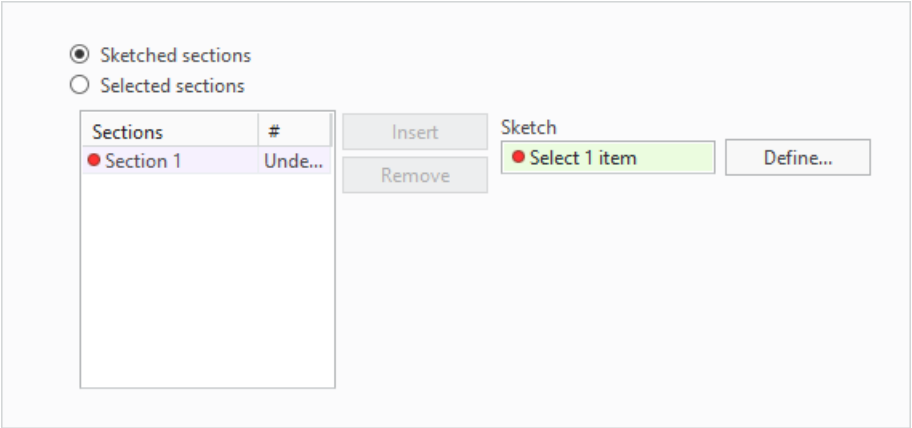

*Figure 14-11 The **Sections** slide-down panel*

Sketched sections

This radio button is used to create sketches in the drawing area to form the blend. When you select this radio button, the **Define** button will be displayed which is used to enter the sketcher environment. You can use the **Insert** button displayed in the panel to add more sketches in blend.

Selected sections

This radio button is used to select sketches from the drawing area to form the blend. You can use the **Insert** button displayed in the panel to add more sketches in blend.

Options Tab

The **Options** tab contains the options related to the shape to be created of the blend feature. The options available in this tab are discussed next.

Straight

The **Straight** radio button is available in the **Blended surfaces** area. This option is used to connect the vertices of all sections in a blend feature with straight lines.

Smooth

The **Smooth** radio button is available in the **Blended surfaces** area. This option is used to connect the vertices of all sections in a blend feature with smooth curves.

Capped Ends

The **Capped Ends** check box is available in the **Start and End Sections** area.

Add bends on sharp edges

The **Add bends on sharp edges** check box is available in the **Sheetmetal options** area. This option is used to provide rounds on the sharp edges of a wall. On selecting this option, you can specify the value of radius in the edit box activated below this option.

Tangency Tab

The **Tangency** tab will only be available when you select the **Smooth** radio button from the **Options** tab. The options in this tab are used to set the boundary of selected or created sketches in the Free, Tangent, or Normal condition.

Figure 14-12 shows the sketch of three sections that will be used to create the blend feature. Figures 14-13 and 14-14 show the parallel blend features with straight edges and smooth edges, respectively. These features are created using the sections shown in Figure 14-12.

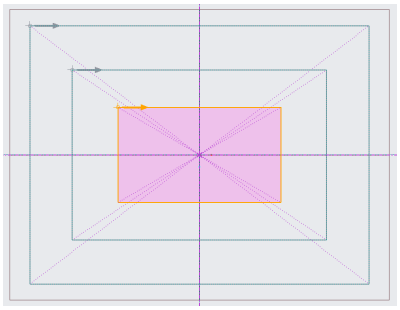

Figure 14-12 *The sketch showing three sections for creating the parallel blend feature*

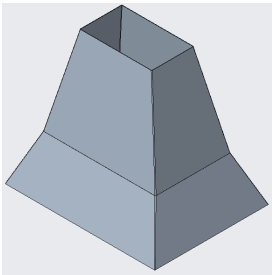

Figure 14-13 *Blend feature with straight edges*

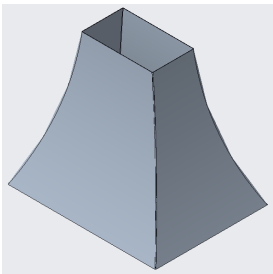

Figure 14-14 *Blend feature with smooth edges*

Note

While drawing sections for creating an unattached blend wall, the start point of all sections should be in the same direction in order to avoid twisted blend features.

Creating the Unattached Rotational Blend Wall

Ribbon: Sheetmetal > Walls > Rotational Blend

The rotational blends are created by using the sections that are rotated about the Y-axis up to a maximum of 120-degree. To do so, an angle called rotational blend angle has to be defined between each section. Each section in the rotational blend feature is rotated about a geometric centerline drawn in the first sketch.

To invoke the **Rotational Blend** tool, choose **Rotational Blend** from the expanded **Shapes** group; the **Rotational Blend** dashboard will be displayed, as shown in Figure 14-15.

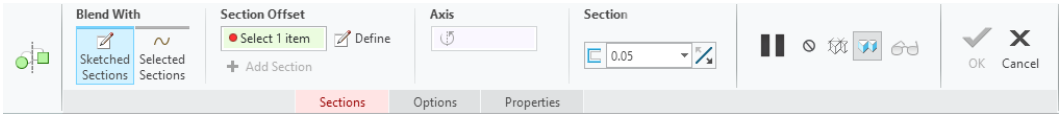

Figure 14-15 *Partial view of the* ***Rotational Blend*** *dashboard*

Figure 14-16 shows the sections used to create the rotational blend feature. As evident, in Figure 14-16, two sections are used to create the rotational blend feature and these sections are at an angle of 110-degree to each other. It is also evident from the figure that the second section is dimensioned from the geometric centerline that was defined in the first section. Figure 14-17 shows the shaded model of the rotational blend feature.

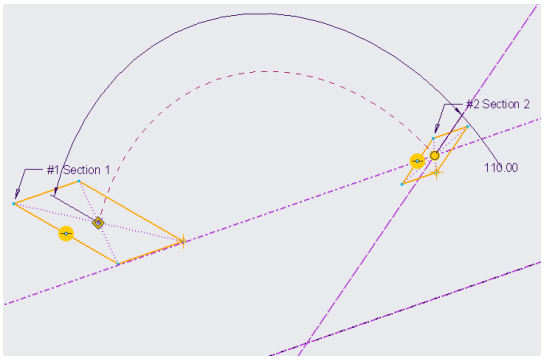

Figure 14-16 *Two dimensioned sections creating rotational blend feature*

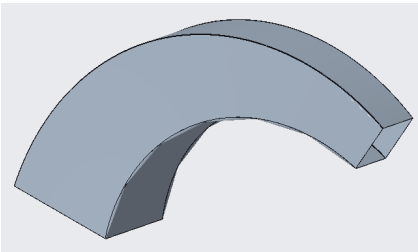

Figure 14-17 *Shaded model of the rotational blend feature*

Note

You can select the ***Connect end and start sections*** *check box from the* ***Options*** *tab to create a closed blend feature. But for creating a closed blend feature, there should be at least three sections.*

Creating the Unattached Offset Wall

Ribbon: Sheetmetal > Walls > Offset

The unattached offset wall is a reflection of a quilt or a surface set at a specified distance from the original wall. To create an offset wall, choose the **Offset** tool from the **Walls** group drop-down list; the **Offset** dashboard will be displayed, as shown in Figure 14-18, and you will be prompted to select a quilt or a solid surface to offset.

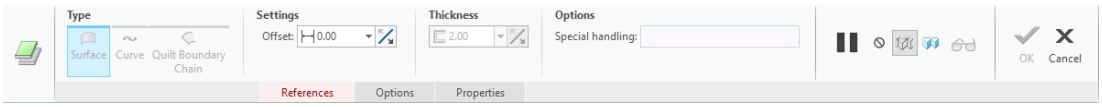

Figure 14-18 *The* ***Offset*** *dashboard*

Select the surface that you want to offset and enter the required distance value in the **Offset** edit box available in the dashboard. You can also define the type of offset wall using the options in the **Options** tab. When you click on the **Normal to Surface** option from this slide-down panel, a drop-down list will be displayed, as shown in Figure 14-19. The options in the list are discussed next.

Normal to Surface

The **Normal to Surface** option is selected by default. As a result, the offset wall is created normal to the quilt or selected surface.

Controlled Fit

This option, when selected, creates the offset wall at a controlled distance.

Automatic Fit

This option automatically fits the offset wall at a distance from the quilt or surface. Figure 14-20 shows the offset wall created at a distance of 30mm from the top surface of the original flat wall.

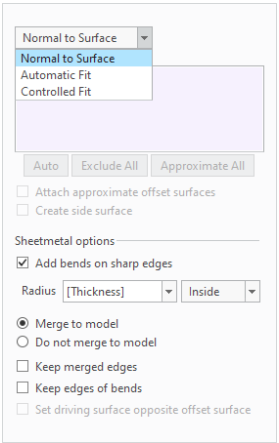

Figure 14-19 *Expanded drop-down list displayed on choosing the* ***Normal to Surface*** *option*

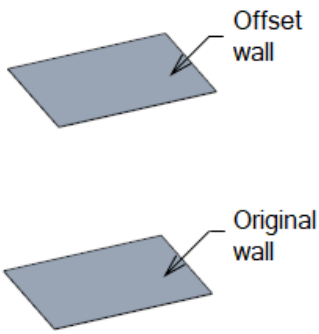

Figure 14-20 *Model with the original wall and the offset wall*

Note

An offset wall cannot be the first feature in your design.

Creating a Flat Wall

Ribbon: Sheetmetal > Walls > Flat

A flat wall is a planar or an unbent section of the sheetmetal. To create a flat wall, first you need to create the primary wall. The creation of the primary wall (unattached flat wall) has been discussed earlier in this chapter. The flat wall can take any shape, but the surface adjacent to the attached edge must be planar. To create a flat wall, choose the **Flat** tool from the **Walls** group in the **Sheetmetal** tab; the **Flat** dashboard will be displayed, as shown in Figure 14-21. The options in this dashboard are discussed next.

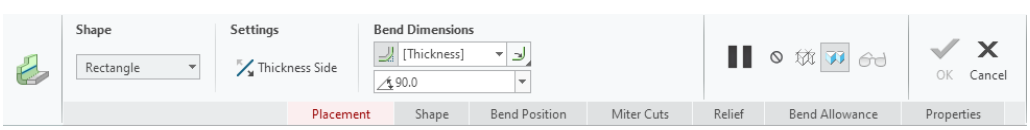

Figure 14-21 *Partial view of the* ***Flat*** *dashboard*

Placement Tab

When you choose the **Placement** tab, a slide-down panel will be displayed, as shown in Figure 14-22. The collector in this slide-down panel displays **Select items** because the attachment edge has not yet been defined. When you select the attachment edge, the collector in the slide-down panel will display the edge selected. Also, a preview of the rectangular flat wall will be created perpendicular to the edge selected. You can select multiple edges to create multiple walls.

Shape Tab

When you choose the **Shape** tab and click on **Section Preview**, a slide-down panel will be extended, as shown in Figure 14-23. This panel displays the predefined wall profiles and their default dimensions.

By default, **Rectangle** is selected in the **Shape** drop-down list in the **Flat** dashboard. The different profiles of walls are **Rectangle**, **Trapezoid**, **L**, **T**, and **User Defined**. These profiles can be selected from the **Shape** drop-down list in the **Flat** dashboard.

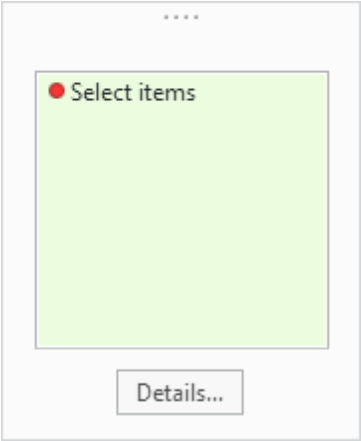

Figure 14-22 *The* ***Placement*** *slide-down panel*

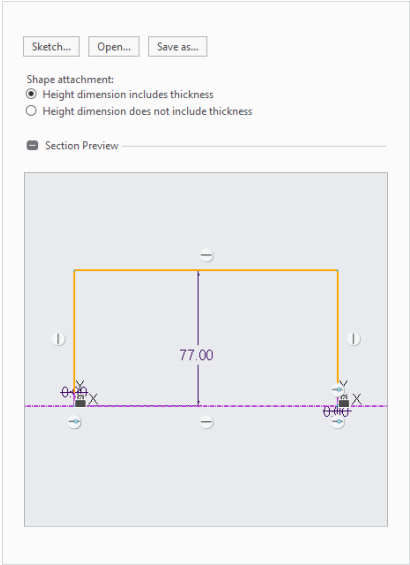

Figure 14-23 *The* ***Shape*** *slide-down panel*

Bend Position Tab

The options in this tab are used to create a flat wall at a specified distance from the selected attachment edge. When you choose the **Bend Position** tab, a slide-down panel will be displayed, as shown in Figure 14-24. Different types of offsets in the **Type** area are discussed next.

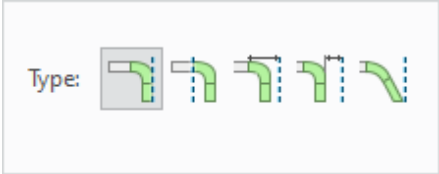

Figure 14-24 *The* ***Bend Position*** *slide-down panel*

Profile on Edge

This option in the **Type** area is used to add bend geometry while keeping the wall profile on the original attachment edge.

Bend Outside

This option in the **Type** area is used to add bend geometry with the bend line tangent to the attachment edge.

Offset from Bend Start

This option in the **Type** area is used to measure the offset from the attachment edge to the bend start.

Offset from Bend Apex

This option in the **Type** area is used to measure the offset from the attachment edge to the bend apex.

Constrained

This option in the **Type** area is used to keep the attached wall geometry within the boundary of the attached edge.

Value

In the **Value** edit box, type an offset value or choose a previously used value from the list displayed when you place cursor on the down arrow. A positive value will add to the attachment segment and a negative value will trim the attachment segment by the specified value.

Miter Cuts Tab

When you choose the **Miter Cuts** tab, a slide-down panel will be displayed, as shown in Figure 14-25. Miter cuts are created to allow bending of two sheetmetal plates created in the same plane. Options available in the dashboard are discussed next

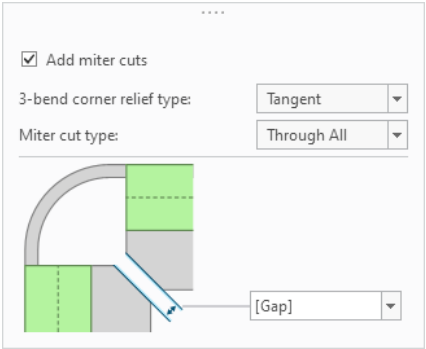

Figure 14-25 *The* ***Miter Cuts*** *slide-down panel*

Add miter cuts

Select this check box to add miter cuts to the geometry. On selecting this check box, all the options in the dashboard will be activated.

3-bend corner relief type

This drop-down list is used to specify different types of relief such as **Tangent**, **Open**, **Closed**, and **Rip** to control the relief cut on the geometry.

Miter cut type

This drop-down list is used to specify different types of reliefs such as **Obround**, **Through All**, and **No Gap** to control the shape of groove.

Gap

In the **Gap** edit box, type a gap value or choose a previously used value from the list displayed when you place the cursor on the down arrow.

Relief Tab

The reliefs control the sheetmetal material behavior and prevent unwanted deformation. For example, consider a bend without a relief. It might not represent an accurate real life model due to the stretching of material. By adding the appropriate bend relief, the sheetmetal bend will meet your design intent and enable you to create an accurate flat model. Reliefs may be added to the model at various stages of its creation.

The **Relief** tab allows you to choose the type of relief to be applied on the wall. When you choose the **Relief** tab, a slide-down panel will be displayed, as shown in Figure 14-26, select type of relief from the **Relief Category List** area. When the **Define each side separately** check box is selected, the **Side 1** and **Side 2** radio buttons will be enabled. These options are discussed next.

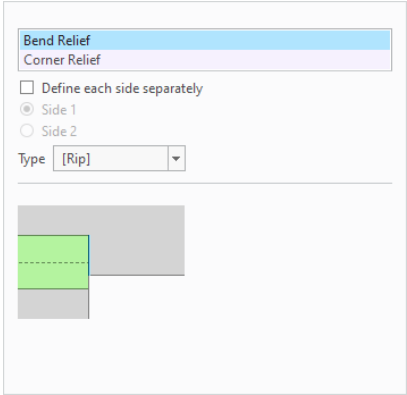

Figure 14-26 *The **Relief** slide-down panel*

Side 1

The **Side 1** radio button is used to apply a relief on one side of the attachment edge.

Side 2

The **Side 2** radio button is used to apply a relief on the other side of the attachment edge.

Type Drop-down List

The **Type** drop-down list specifies different types of reliefs such as **No Relief**, **Rip**, **Stretch**, **Rectangular**, and **Obround**. By default, the **Rip** is selected in the **Type** drop-down list. The different types of reliefs are discussed next.

Stretch Relief: This type of relief stretches the material, in which the bent area intersects the fixed area. The stretch relief is shown in Figure 14-27.

Rip Relief: This type of relief cuts the material at each bend endpoint. The cuts are made normal to the bend line. The rip relief is shown in Figure 14-28.

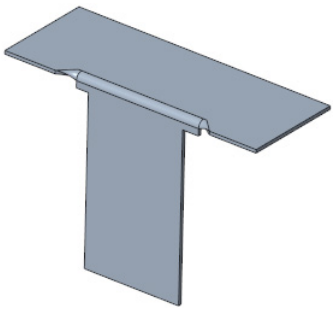

Figure 14-27 *Model with the stretch relief*

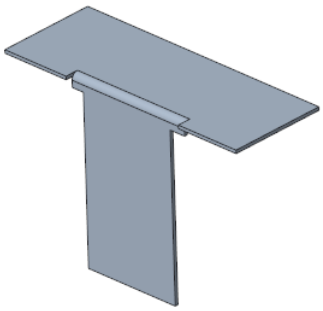

Figure 14-28 *Model with the rip relief*

Rectangular Relief: This option adds a rectangular relief at each bend endpoint. The rectangular relief is shown in Figure 14-29.

Obround Relief: This option adds an obround relief at each bend endpoint. The obround relief is shown in Figure 14-30.

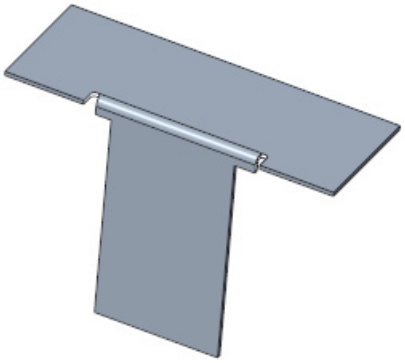

Figure 14-29 Model with the rectangular relief

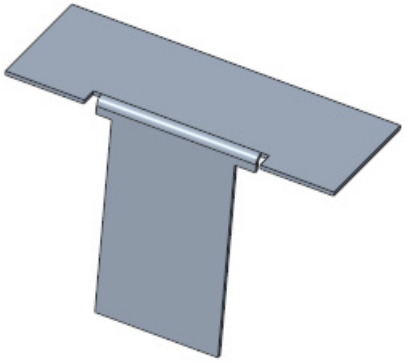

Figure 14-30 Model with the obround relief

When you select the **Corner Relief** option, the **Type** drop-down panel will be displayed. The corner reliefs available in this drop-down are **V Notch**, **No relief**, **Normal**, **Circular**, **Square**, **Rectangular**, and **Obround**.

Bend Allowance Tab

The **Bend Allowance** tab is used to calculate the undeveloped length of the sheetmetal required to create a bend of specified radius and angle. When you choose the **Bend Allowance** tab, a slide-down panel will be displayed, as shown in Figure 14-31. By default, the **Use part settings** option is selected in the **Developed length calculation** drop-down list. When you select the **Use feature settings** option from the drop-down list, the **By K factor**, **By Y factor**, and **By bend table** options will get enabled. These options are discussed next.

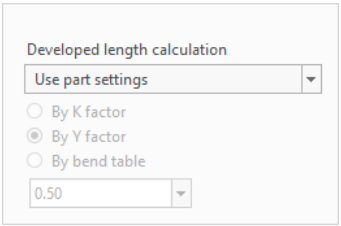

*Figure 14-31 The **Bend Allowance** slide-down panel*

By K factor

K Factor is the ratio between the neutral bend line and thickness of the material.

By Y factor

Y Factor is a variable based of the more commonly used K Factor. It is derived by taking half of the K Factor multiplied by pi.

By Bend table

It controls the calculations required for the length of flat material (developed length) needed to create a bend.

Adds bend on the attachment edge

The **Adds bend on the attachment edge** button creates a bend between the existing sheetmetal wall and the newly created wall. This button is available on the dashboard. There are three methods of specifying the bend parameters of the flat wall and these are discussed next.

Dimension the inner surface of the bend

On choosing this button, you can specify the dimension for the inner surface of the bend.

Dimension the outer surface of the bend

On choosing this button, you can specify the dimension for the outer surface of the bend.

By Parameter

When you choose this button, the radius value and the radius side are automatically taken from the **SMT_DFLT_BEND_RADIUS** and **SMT_DFLT_RADIUS_SIDE** parameters.

Figure 14-32 shows the base wall and Figure 14-33 shows the flat wall created on the rear edge of the base wall.

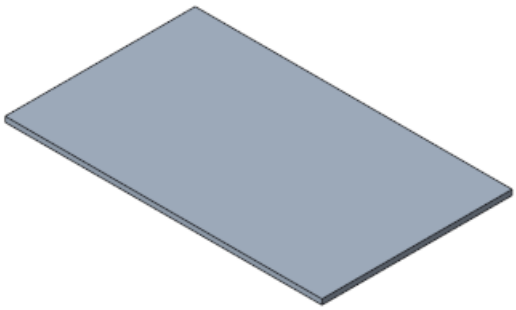

Figure 14-32 *Model of the base wall*

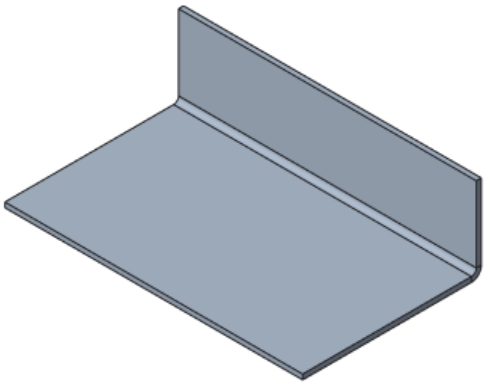

Figure 14-33 *Model with the flat wall*

Creating a Twist Wall

Ribbon: Sheetmetal > Walls > Twist

A twist wall is a spiraling or coiling section of sheetmetal. The twist wall is formed around an axis running through the center of the wall, turning the ends of the wall in opposite directions by a relatively small specified angle. You can attach the twist wall to a straight edge or an existing planar wall. The twist wall typically serves as a transition between two areas of sheetmetal.

Choose the **Twist** tool from the expanded **Walls** group in the **Sheetmetal** tab to invoke the **Twist** dashboard, as shown in Figure 14-34. The options available in this dashboard are discussed next.

Figure 14-34 *The **Twist** dashboard*

On invoking the **Twist** dashboard box, you will be prompted to select the attachment edge on

which the twist wall is to be created. Select the attachment edge from the drawing area; the preview of the twisted wall will be displayed in the drawing area. Also, some of the options in the dashboard will get activated and the selected edge is displayed in the **Placement** collector of the **Placement** slide-down panel, as shown in Figure 14-35.

Figure 14-35 *The* ***Placement*** *slide-down panel*

By default, the **Offset** option is chosen in the dashboard. As a result, the width of the twisted wall is calculated using offset dimensions from the attachment edge. You can choose the **Symmetrical** option to create a twisted wall whose width is calculated from the twist axis by the specified dimension.

When you choose the **Symmetrical** option, you can change the start width by specifying a value in the **Start Width** edit box available next to this option. To locate the twist axis on a datum point, click **Set Twist Axis** option and select a datum point on the attachment edge; the centerline of the twist wall will pass through the datum point. The centerline of the twisted wall will be perpendicular to the start edge and coplanar with the existing wall.

In the dashboard, the **Use end edge for first direction** and **Use end edge for second direction** option is selected by default. You can select the **Trim or extend in first direction from edge end by a specified value** and **Trim or extend in second direction from edge end by a specified value** option from the drop-down to specify the extend of the twisted wall in first and second direction of attachment edge.

To modify the end width of the twisted wall, choose the **Modify Width** option and specify the width in the edit box. You can specify the length of the wall in the **Wall length** edit box. This length is calculated from the attachment edge to the end of the twist axis. You can specify the angle of rotation for the twist wall using the **Twist angle** edit box.

Choose the **Bend Allowance** tab to invoke the slide-down panel, as shown in Figure 14-36. You can use the **Wall length in an unbent state** edit box to specify the length of the twisted wall in unbend state.

Figure 14-37 shows the twist wall attached to the base wall.

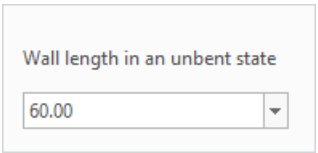

Figure 14-36 *The* ***Bend Allowance*** *slide-down panel*

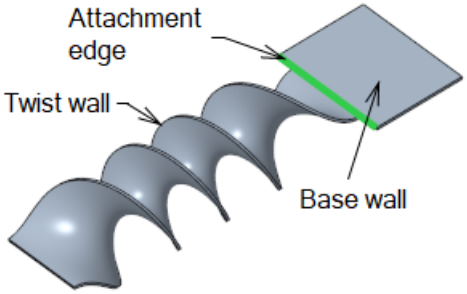

Figure 14-37 *Model with the twist wall attached to the base wall*

Creating an Extend Wall

Ribbon: Sheetmetal > Editing > Extend

The extend wall lengthens an existing wall. You can extend the wall from a straight edge on an existing wall to a planar surface or to a specified distance. The **Extend** button is located in the **Editing** group. This button will be activated only when you select any straight edge. On choosing this button, the **Extend** dashboard will be displayed, as shown in Figure 14-38. Now, you can enter the value of extension in the **Extend by** edit box. The options in the dashboard are discussed next.

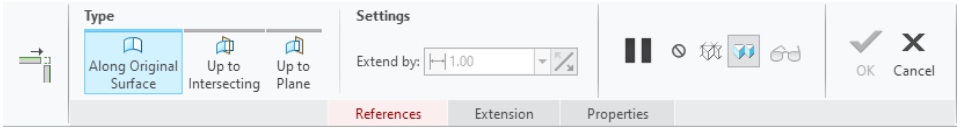

*Figure 14-38 The **Extend** dashboard*

Along Original Surface

This option allows you to extend the wall to a specified distance. You can select a default value or enter a required value.

Up to Intersecting

This option allows you to extend the wall to intersect a plane or face. The plane or face to be intersected can be an existing default datum plane, the flat face of another independent flat wall, or a new datum plane.

Up to Plane

This option allows you to extend the wall up to a plane. The plane or face upto which a wall is to be extended can be an existing default datum plane, the flat face of another independent flat wall, or a new datum plane.

Figure 14-39 shows two independent unattached flat walls, Figure 14-40 shows the extended wall created using the **Up to Intersecting** button, and Figure 14-41 shows the extended wall created using the **Up to Plane** button.

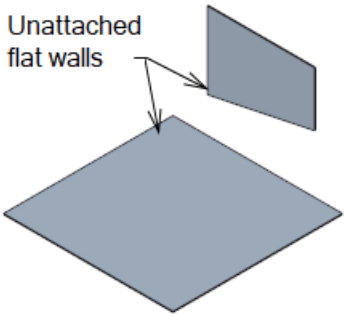

Figure 14-39 Model with two independent unattached flat walls

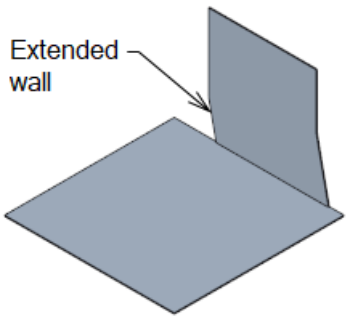

*Figure 14-40 Extended wall created using the **Up to Intersecting** button*

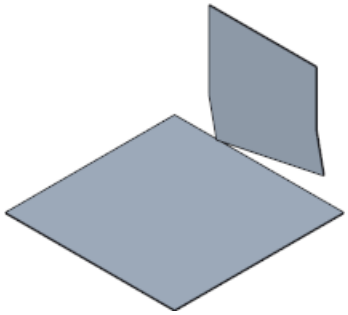

Figure 14-41 *Extended wall created using the* ***Up to Plane*** *button*

Creating a Flange Wall

Ribbon: Sheetmetal > Walls > Flange

A flange wall is the bent section of a sheetmetal. To create a flange wall, choose **Model > Shapes > Flange** from the **Ribbon**; the **Flange** dashboard will be displayed, as shown in Figure 14-42. The options in this dashboard are discussed next.

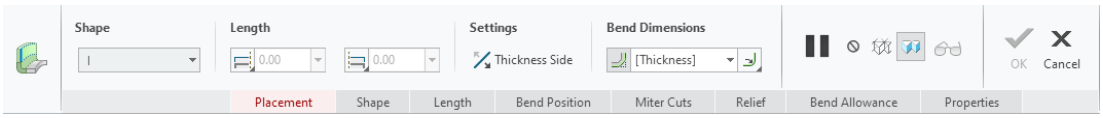

Figure 14-42 *Partial view of the* ***Flange*** *dashboard*

Placement Tab

The **Placement** tab indicates the reference edge chosen to create the flange wall. When you choose the **Placement** tab, a slide-down panel will be displayed, as shown in Figure 14-43.

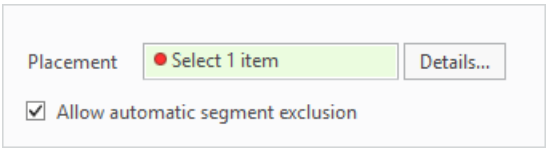

Figure 14-43 *The* ***Placement*** *slide-down panel*

Shape Tab

When you choose the **Shape** tab and click on **Section Preview**, a slide-down panel will be extended, as shown in Figure 14-44. The **Shape** tab indicates the profiles and dimensions of the predefined flange wall shapes such as **I**, **Arc**, **S**, **Open**, **Flushed**, **Duck**, **C**, **Z**, **Joggle**, or **User Defined**. The predefined wall profile can be selected from the drop-down list in the **Flange** dashboard. When you choose the **Shape** tab after selecting the predefined wall profile, a slide-down panel will be displayed with three buttons, as shown in Figure 14-44. The **Sketch** button in the slide-down panel can be used to draw the sketch for the user-defined profile. The **Open** button in the slide-down panel can be used to import sketch. Choose the **Open** button from this slide-down panel; the **Open** dialog box will be displayed. Using this dialog box, you can import the required sketch. The **Shape attachment** area determines the height of the wall. There are two radio buttons in this area: **Height dimension includes thickness** and **Height dimension does not include thickness**. On selecting the first radio button, the thickness of the sheetmetal is included while calculating the wall height, whereas on selecting the other radio button, the thickness is not included while calculating the wall height. The **Save as** button in the slide-down panel can be used to save the sketch so that you can import it later on.

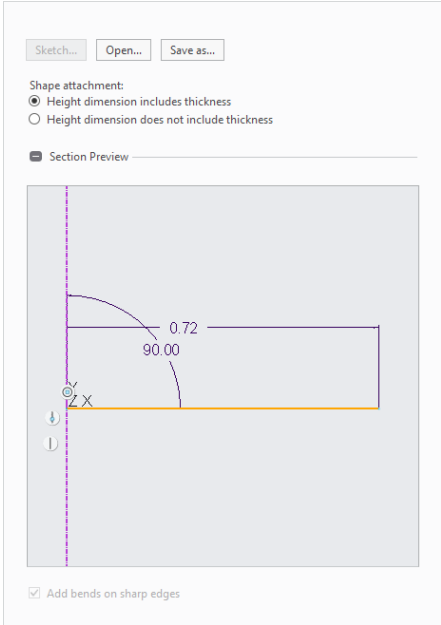

Figure 14-44 *The* ***Shape*** *slide-down panel*

Length Tab

The **Length** tab allows you to extend the end faces of the **Flange** independently. The edit boxes in the slide-down panel can be used to specify the distance through which the flange wall has to be extended in either direction. When you choose the **Length** tab, the slide-down panel will be displayed, as shown in Figure 14-45.

Figure 14-45 *The* ***Length*** *slide-down panel*

Bend Position Tab

The options in this tab are used to create a flat wall at a specified distance from the selected attachment edge. When you choose the **Bend Position** tab, a slide-down panel will be displayed, as shown in Figure 14-46. Different types of offsets in the **Type** area are discussed next.

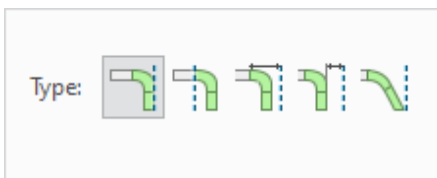

Figure 14-46 *The* ***Bend Position*** *slide-down panel*

Profile on Edge

This option in the **Type** area is used to add bend geometry while keeping the wall profile on the original attachment edge.

Bend Outside

This option in the **Type** area is used to add bend geometry with the bend line tangent to the attachment edge.

Offset from Bend Start

This option in the **Type** area is used to measure the offset from the attachment edge to the bend start.

Offset from Bend Apex

This option in the **Type** area is used to measure the offset from the attachment edge to the bend apex.

Constrained

This option in the **Type** area is used to keep the attached wall geometry within the boundary of the attached edge.

Value

In the **Value** edit box, type an offset value or choose a previously used value from the list displayed when you place cursor on the down arrow. A positive value will add to the attachment segment and a negative value will trim the attachment segment by the specified value.

Miter Cuts Tab

When you choose the **Miter Cuts** tab, a slide-down panel will be displayed, as shown in Figure 14-47. Miter cuts are created to allow bending of two sheetmetal plates created in the same plane.

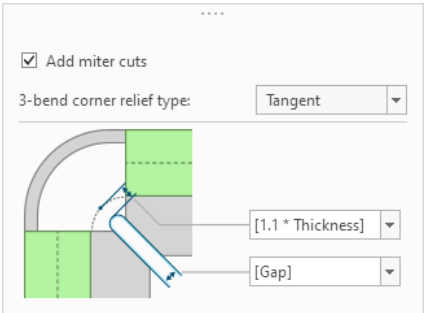

Figure 14-47 *The* ***Miter Cuts*** *slide-down panel*

Relief Tab

The **Relief** tab allows you to choose the type of relief to be provided to the sheetmetal wall to prevent any unwanted deformation. This tab can also be used to create bend reliefs and corner reliefs. When you choose the **Relief** tab, a slide-down panel will be displayed, as shown in Figure 14-48.

When the **Define each side separately** check box is selected in the **Relief** slide-down panel, the **Side 1** and **Side 2** radio buttons will be enabled. The bend reliefs available in the slide-down panel are **Rip**, **Stretch**, **Rectangular**, and **Obround**.

When you select the **Corner Relief** option, the **Relief** slide-down panel will be displayed, as shown in Figure 14-49. The corner reliefs available in this area are **V Notch**, **Normal**, **Circular**, **Square**, **Rectangular**, and **Obround**.

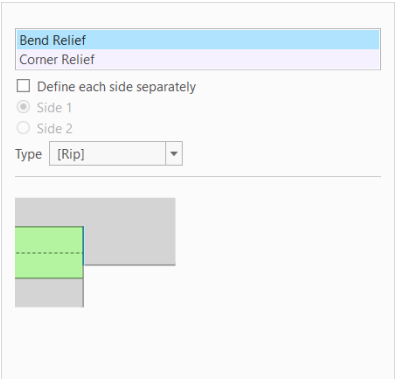

*Figure 14-48 The **Relief** slide-down panel with the **Bend Relief** option selected*

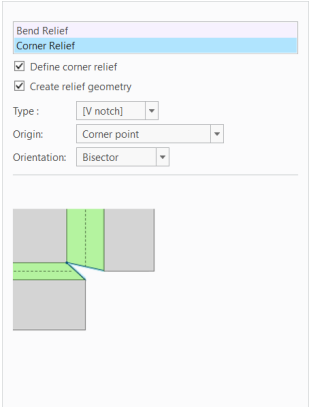

*Figure 14-49 The **Relief** slide-down panel with the **Corner Relief** option selected*

Bend Allowance Tab

When you choose the **Bend Allowance** tab, a slide-down panel will be displayed, as shown in Figure 14-50. When the **Use feature settings** option is selected in the drop-down, the **By K factor** radio button, the **By Y factor** radio button, and the **Use Bend table** check box will be enabled. These options have already been discussed earlier in this chapter.

Properties Tab

When you choose the **Properties** tab, a slide-down panel will be displayed, as shown in Figure 14-51. This slide-down panel displays the feature identity in the **Name** collector. The **i** button in the slide-down panel, when chosen, opens the browser that displays the information about the feature you have created.

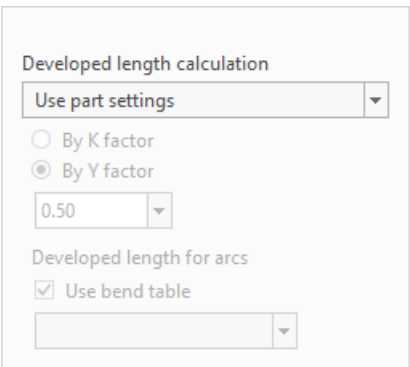

*Figure 14-50 The **Bend Allowance** slide-down panel*

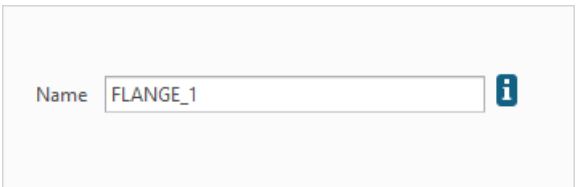

*Figure 14-51 The **Properties** slide-down panel*

Figure 14-52 shows a flange wall with a rectangular relief created on the primary unattached flat wall.

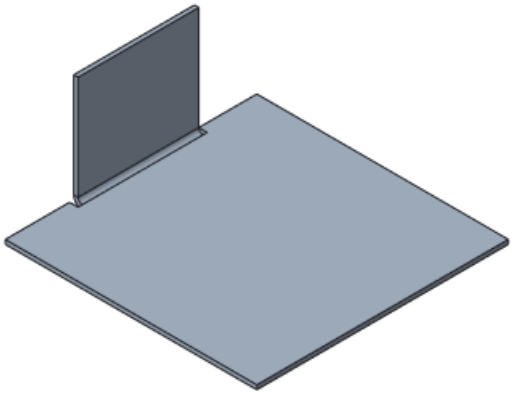

Figure 14-52 Model with the flange wall attached to the base wall

CREATING THE BEND FEATURE

Ribbon: Sheetmetal > Bends > Bend drop-down > Bend

The **Bend** tool transforms the sheetmetal wall into an angular or roll shape. You need to sketch a bend line and determine the direction of the bend using the direction arrows or by orienting the sketching view. The bend line is used as the reference for calculating the developed length and creating the bend geometry. Bends can be added at any time during the design process as long as a wall feature exists. You can add bends across form features, but you cannot add them where they cross another bend. Depending on where you place the bend in your sheetmetal design, you may need to add reliefs to the bend.

To create a bend, choose the **Bend** tool from the **Bend** drop-down of the **Bends** group in the **Model** tab of the **Ribbon**; the **Bend** dashboard will be displayed, as shown in Figure 14-53. The options in this dashboard are discussed next.

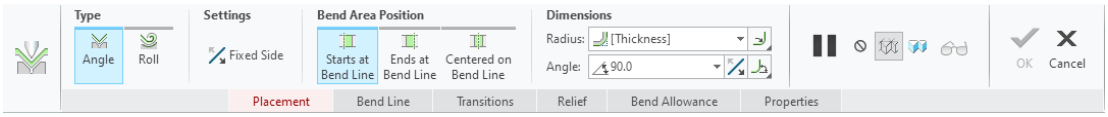

*Figure 14-53 Partial view of the **Bend** dashboard*

Starts at Bend Line

On choosing this button, the sheetmetal component will bend from the bend line. Figure 14-54 shows the bend line and its drag handle and Figure 14-55 shows preview of the bend created using the **Starts at Bend Line** button.

Ends at Bend Line

When you choose this button, the outer edge of the bend will become collinear to the bend line, refer to Figure 14-56.

Centered on Bend Line

When you choose this button, the bend material will be added on both sides of the bend line, refer to Figure 14-57.

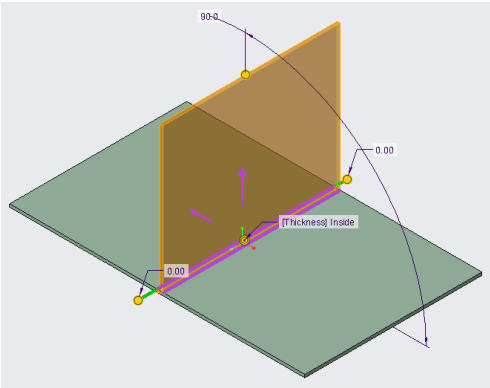

Figure 14-54 *Bend line and drag handle of the bend line*

Figure 14-55 *Preview of the bend created using the* ***Starts at Bend Line*** *button*

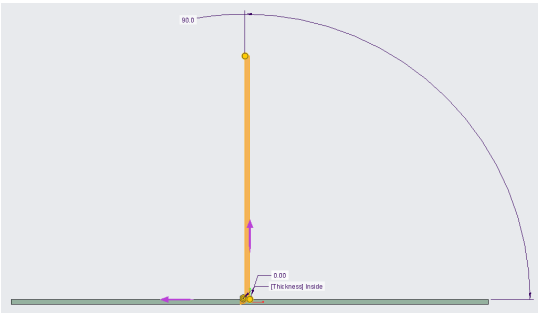

Figure 14-56 *Preview of the bend created using the* ***Ends at Bend Line*** *button*

Figure 14-57 *Preview of the bend created using the* ***Centered on Bend Line*** *button*

Fixed Side

Using the **Fixed Side** button, you can change the fixed side of the bend. Alternatively, you can click on the horizontal arrow displayed in the preview of bend to flip the fixed side.

Angle

This button is used to create a bend through an angle. The vertical arrow displayed in the preview of bend determines the direction of the bend. When you click on the vertical arrow, the direction of bend gets reversed. Alternatively, you can choose the **Change bending direction** button next to the **Angle** edit box in the dashboard.

In the dashboard, there is a drop-down list next to the **Change bending direction** button. There are two options available in this drop-down list to measure the bend angle. These options are discussed next.

Measure the resulting internal bend angle

When this option is selected, the bend angle is calculated from the fixed side.

Measure the bend angle deflection from straight

When this option is selected, the bend angle is calculated from the side to be bent.

Roll

Using this button, you can create a bend upto the end of the surface selected for bending. When you choose this button, the **Angle** edit box will become inactive. Now, you need to enter the radius value in the **Radius** edit box next to the **Change bending direction** button. You can use the inner radius or outer radius by using the options in the drop-down list next to the radius value edit box. Figure 14-58 shows the preview of the model after choosing the **Roll** button and the **Start at Bend Line** button from the dashboard. Therefore, using this tool, you can create a roll of the sheetmetal.

Placement Tab

When you click on the **Placement** tab, a slide-down panel will be displayed, as shown in Figure 14-59. Also, you will be prompted to select a surface or an edge to define the bend surface or bend line. On selecting the edge, the preview of the bend will be displayed and the **Offset bend line** check box will become active. After selecting this check box, you can enter the distance value of the bend line from the selected edge.

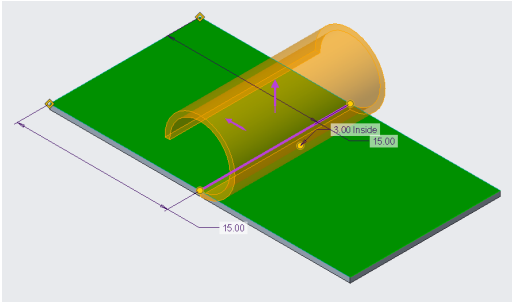

Figure 14-58 *Preview of the model created using the* ***Bend to end of surface*** *and* ***Bend material on other side of bend line*** *buttons*

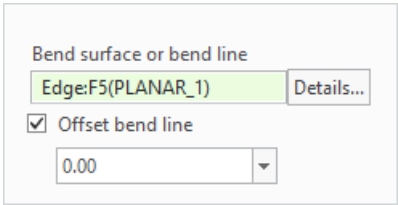

Figure 14-59 *The* ***Placement*** *slide-down panel*

Bend Line Tab

This tab is active only after selecting a surface. If you click on the **Bend Line** tab, a slide-down panel will be displayed, as shown in Figure 14-60. To create a bend line, click on the **Reference** collector in the **Bend line end 1** area and select the desired edge. Now, you need to select an offset reference. Click on the **Offset reference** collector and select the desired edge as offset reference. You can enter the distance value of the offset reference in the edit box adjacent to the offset collector, which was selected earlier. In this way, the first end point is defined. Use the same procedure to define the second end point of the bend line.

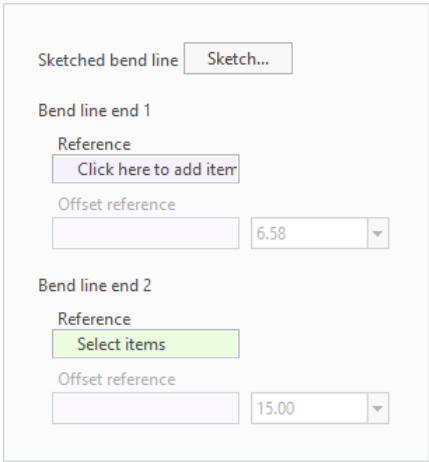

Figure 14-60 *The* ***Bend Line*** *slide-down panel*

Alternatively, select any of the red handles displayed on the selected surface and drag it to the desired edge. Note that when you drag the handle to an edge, the shape of the handle changes to the closed square and finally to a yellow circle. When you drop the handle on the edge, a

new handle connected to the earlier selected handle will be displayed in the screen. Drag this new handle to another edge to define the offset reference. Same procedure will be required for the other handle.

Transitions Tab

When you click on the **Transitions** tab, a slide-down panel is displayed, as shown in Figure 14-61. This slide-down panel is used to add a transition area on the sheetmetal. To define the transition area, click on the **Add Transition** option displayed in the slide-down panel; the **Transition 1** option will be added to the transition list and the **Sketch** button will be activated. You need to choose this button and draw two straight lines to define the transition area. Figures 14-62 and 14-63 show the preview of the bend before and after applying transition, respectively. Rest of the tabs are discussed earlier.

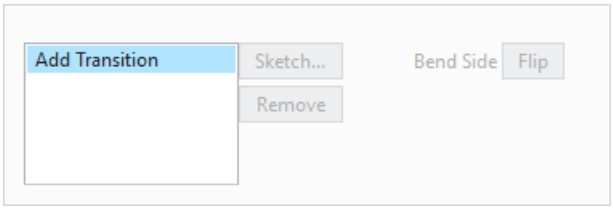

Figure 14-61 *The* ***Transitions*** *slide-down panel*

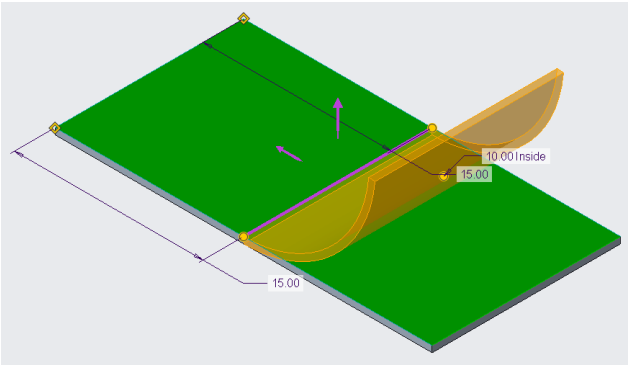

Figure 14-62 *Preview of the bend before applying transition*

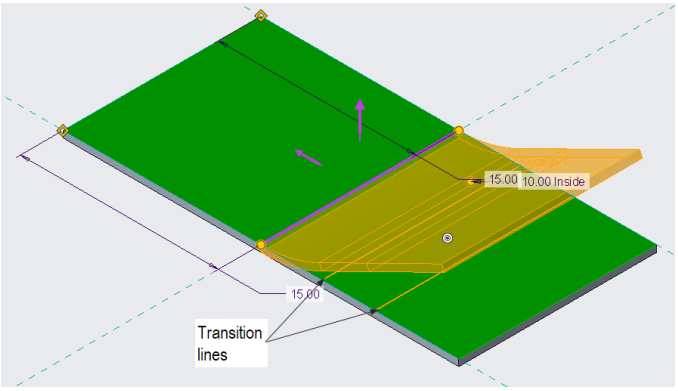

Figure 14-63 *Preview of the bend after applying transition*

Edge Bend

Ribbon: Sheetmetal > Bends > Bend drop-down > Edge Bend

The **Edge Bend** tool is available in the **Bend** drop-down of the **Bends** group in the **Sheetmetal** tab. You can create rounds at the sharp edges by using this tool. When you choose this tool, the **Edge Bend** dashboard will be displayed, as shown in Figure 14-64. Also, you will be prompted to select edges. Select the edge on which you want to create a round; the preview of the bend will be displayed on the screen.

Figure 14-64 *Partial view of the* ***Edge Bend*** *dashboard*

Planar Bend

Ribbon: Sheetmetal > Bends > Bend drop-down > Planar Bend

A Planar bend forces the sheetmetal wall around an axis that is normal to the surface and the sketching plane. You need to sketch a bend line and form the planar bend around an axis using the direction arrows which will be displayed in the drawing area. Choose the **Planar Bend** tool from the **Bend** drop-down in the **Bends** group of the **Sheetmetal** tab; the **OPTIONS** menu will be displayed. Choose **Angle > Done** from the **OPTIONS** menu; the **BEND Options: Angle, Planar** dialog box and the **USE TABLE** menu will be displayed. Choose the required option and then choose **Done/Return** from the **USE TABLE** menu. You will next be prompted to select the sketching plane. Select the sketching plane and define its orientation. Sketch the bend line and specify the direction of the bend through the direction arrows, which appear in the drawing area. Figure 14-65 shows the bend line sketched on the base wall and Figure 14-66 shows a bend created on the base wall using the **Planar** option. There are two types of **Planar** bends. They are discussed next.

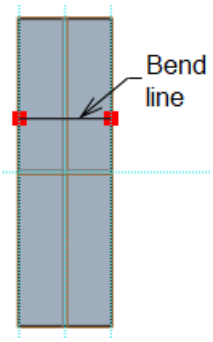

Figure 14-65 *Bend line sketched on the base wall*

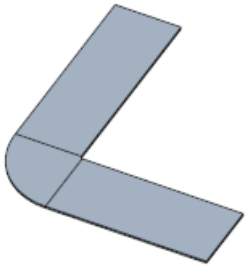

Figure 14-66 *Bend created on the base wall*

Angle

This option, when selected, bends the sheetmetal wall through a specified radius and angle.

Roll

This option, when selected, bends the sheetmetal wall through a specified radius, but the angle is determined by both the radius and the amount of flat material to be bent.

Note

*You cannot copy a bend using the **Mirror** option. While you can generally unbend zero-radius bends, you cannot unbend the bends with cuts across them. If you do modify the developed length, remember that revising the developed length only affects the unbent geometry and not the bend back features.*

CREATING THE UNBEND FEATURE

Ribbon: Sheetmetal > Bends > Unbend drop-down > Unbend

The **Unbend** option flattens any curved surface on the sheetmetal part. The curved surface may be a bend feature or a primary or secondary wall created previously. When you choose the **Unbend** tool from the **Unbend** drop-down in the **Bends** group of the **Sheetmetal** tab, the **Unbend** dashboard will be displayed, as shown in Figure 14-67. Note that when you invoke this dashboard the surface created first gets selected automatically. If you want to change the selection, then right-click in the **Fixed geometry** collector and choose the **Remove** option from the shortcut menu. The different options in the **Unbend** dashboard are discussed next.

Figure 14-67 *Partial view of the **Unbend** dashboard*

Automatic

The **Automatic** button is chosen by default in the **Unbend** dashboard. So, on applying the **Unbend** tool, all the bent edges are unbent automatically. Note that the section chosen to create the unbend feature must be developable.

Manual

This button is used to select the bend edges manually. You can select more than one edge by holding the CTRL key. When you select the bend edges, the preview of unbent model will be displayed on the screen.

Fixed Geometry

This collector is used to collect a surface or an edge to be kept fixed during unbending.

References Tab

When you click on this tab, the **References** slide-down panel is displayed. In this slide-down panel, two collectors are available, **Bent Geometry** and **Fixed Geometry**. The **Bent Geometry** collector is used to collect the edges or surfaces to be unbent and the **Fixed Geometry** collector is used to collect the surfaces or edges to be fixed.

Deformations Tab

When you click on this tab, the **Deformations** slide-down panel is displayed. Now, you can add a surface to the **Deformation surfaces** collector. The surfaces that deform in more than one direction are added to this collector.

Distinct Areas Tab

The options in this tab are used to display and set a fixed geometry reference for one or more distinct areas in the part. This area will be activated only when the particular surface is selected which is fixed for that distinct area in the **Deformation surfaces** collector of the **Deformations** tab. The options in this tab are discussed next.

Distinct Piece

This area displays all automatically detected as well as manually selected distinct area references.

Fixed geometry

This area displays the surface or edge reference that remains fixed during the unbend operation. When you select a non-tangent edge, the **Flip** button in this area gets activated which can be used to flip the side of the edge that remains fixed during the unbend operation.

Deformation Control Tab

When you click on this tab, a slide-down panel is displayed. The options in this panel are used to control the type of deformation for the area selected for deformation. There are three radio buttons in this panel. These radio buttons are discussed next.

Blend Boundaries

When this radio button is selected, the boundaries of the deformation area are blended with the adjacent part edges.

Rip area

When this radio button is selected, the deformation area is removed and a flat pattern is created.

Sketch area

When this radio button is selected, the deformation area is created based on the flat impression of the sketch created.

Options Tab

You can use options in the **Options** tab to create the relief geometry during the unbend operation. You can also redefine the side surfaces if they have been removed using the options in this tab. The options in this tab are discussed next.

Merge colocated side surfaces

This check box is used to toggle the removal of side surfaces that have common location.

Unfold bends added to forms

This check box is used to toggle the unbending/bending of geometry, which is added to a form and is not the part of the original form.

Create relief geometry

This check box is used to toggle the creation of corner relief geometry as set in the relief area of the **Sheetmetal Preferences** dialog box. Note that you can create relief only for corners which do not have already specified reliefs.

Figure 14-68 shows a model with a flat wall attached to the primary wall and a bend created at either ends. Figure 14-69 shows the unbend model created using the **Unbend** tool.

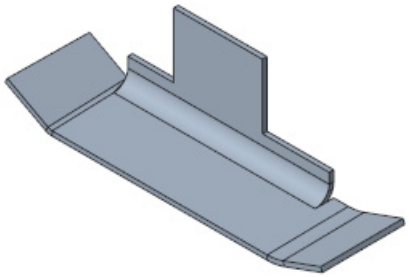

Figure 14-68 *Model with the bend and a flat wall*

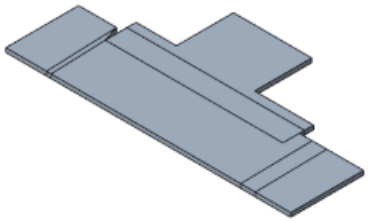

Figure 14-69 *Model after unbending*

Creating the Bend Back

Ribbon: Sheetmetal > Bends > Bend Back

The **Bend Back** tool is used to revert a bend to the unbent position. Remember that ideally you can bend back only the unbent features. When you choose the **Bend Back** tool from the **Bends** group, the **Bend Back** dashboard will be displayed, as shown in Figure 14-70. Note that when you invoke this dashboard, the surface created first gets selected automatically. To change the selection, right-click in the **Fixed geometry** collector and choose the **Remove** option from the shortcut menu. For manual selection, choose the **Manual** button from the dashboard to select the edges or faces to be bent. Click in the **Fixed geometry** collector adjacent to the **Manual** button. Then select the surface which you need to make fixed while creating the bend back feature. As soon as you select the fixed surface, the preview of bend back feature will be displayed. The options in the **Bend Back** dashboard are discussed next.

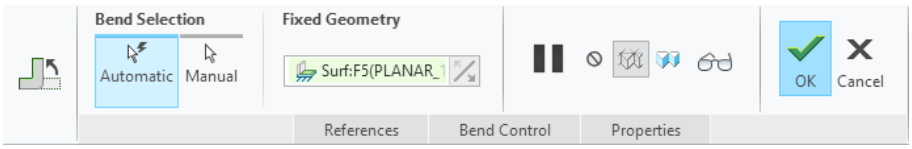

Figure 14-70 *Partial view of the* ***Bend Back*** *dashboard*

References Tab

There are two collectors available under this tab: **Unbent geometry** and **Fixed geometry**. The **Unbent geometry** collector is used to collect the geometries that are to be bent, whereas the **Fixed geometry** collector is used to collect the geometries that are to be fixed.

Bend Control Tab

This tab is used to control the behavior of contours that intersect with the bend line. There are two radio buttons to control the behavior of contours. You can choose the **Bend contour** radio

button to bend the contour or you can make them flat by choosing the **Keep flat** radio button. Figure 14-71 shows the model with the surfaces selected for creating the bend back feature and Figure 14-72 shows the model created by using the **Bend Back** tool.

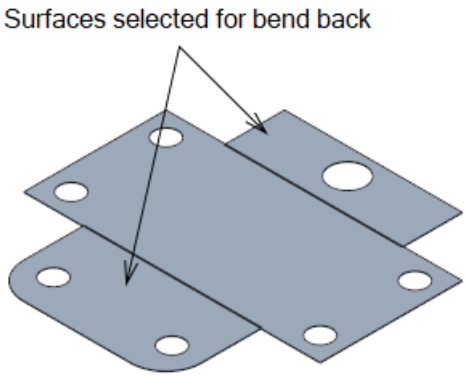

Figure 14-71 *Model with the surfaces selected for creating the bend back feature*

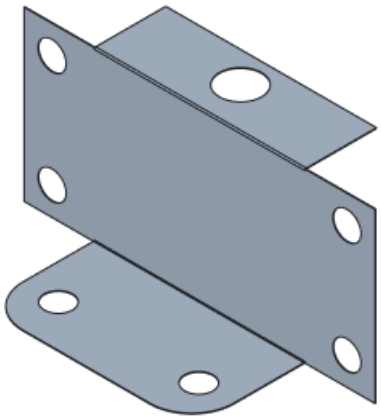

Figure 14-72 *Model after creating the bend back feature*

Note

The model shown in Figure 14-71 is a base wall, with flange walls attached to its front and rear edges. Both the flange walls are unbent, while the base wall is selected as the section to be kept fixed. The ***Bend Back*** *tool is then applied on the model.*

CONVERSION TO SHEETMETAL PART

Converting solid parts to sheetmetal parts enables you to modify your existing solid design with sheetmetal industry features. The conversion can serve as a shortcut in your design process because you can use existing solid designs to reach your sheetmetal design intent. Also, you can include multiple features within a single conversion feature. After you convert a part to sheetmetal, the part behaves like any other sheetmetal component.

Basic Conversion

The process of converting a solid model into a sheetmetal component by removing one of the surfaces or by making one of the surfaces of the solid model as the driving surface is known as the basic conversion. To make a basic conversion, choose **Convert to Sheetmetal** from the **Operations** group of the **Model** tab in the **Ribbon** in model environment; the **Convert** dashboard will be displayed with three options in the **Conversion Type** list, as shown in Figure 14-73. These options are **Driving Surface**, **Shell**, and **Empty Body**. The **Shell** option is used mostly for block-like parts, while the **Driving Surface** option is generally used for thin protrusions with constant thickness.

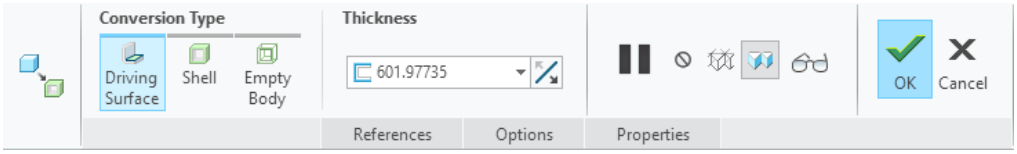

Figure 14-73 *Partial view of the* ***Convert*** *dashboard*

The basic conversion defines how you want to use the existing solid part in your sheetmetal design. You can create the shell feature on the solid model by selecting the surfaces to be removed, or you can make any one of the surface of the solid model as a driving surface (the driving side). Figure 14-74 shows the solid model and Figure 14-75 shows the model after shelling and removing the bottom face.

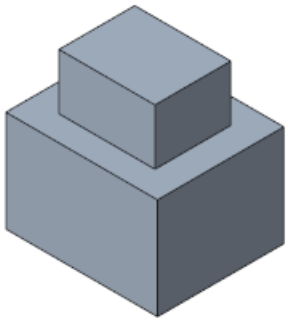

Figure 14-74 *Model of the solid part*

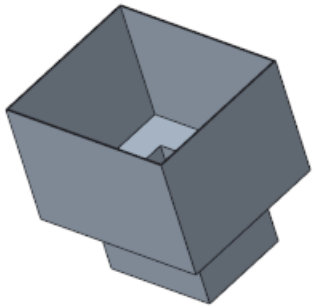

Figure 14-75 *Model after converting it into sheetmetal component by removing the bottom face*

Sheetmetal Conversion

Ribbon: Sheetmetal > Engineering > Conversion

If the converted part is not manufacturable, then you need to make a sheetmetal conversion by adding features such as rips, bends, and corner reliefs. To do so, choose **Conversion** from the **Engineering** group in the Sheetmetal environment; the **Conversion** dashboard will be displayed, as shown in Figure 14-76.

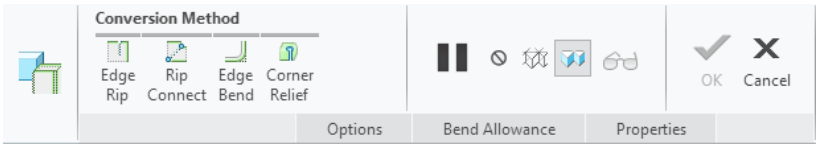

Figure 14-76 *Partial view of the* ***Conversion*** *dashboard*

While converting a solid model into a sheetmetal component, you might need to add certain features such as corner reliefs, edge rips, bends, and so on to make the component manufacturable.

The options available in the dashboard are discussed next.

Edge Rip

A rip feature can be defined as a zero volume cut that tears or shears the sheetmetal walls. If the sheetmetal component you are designing is a continuous piece of material, you cannot unbend the component without creating the rips. This option creates rips along the selected edge, which enables you to unbend the sheetmetal part.

Rip Connect

The **Rip Connect** option connects existing planar rips with straight line rips. The rip

connects are sketched as point-to-point connections, which require you to define rip endpoints. The endpoints can be datum points or vertices and must be the endpoints of a rip.

Edge Bend

This option converts sharp edges to bends. By default, the inner radius of the bend is set to the thickness of the sheetmetal wall.

Corner Relief

This option creates reliefs in selected corners.

Figure 14-77 shows a solid model that has been converted into a sheetmetal component and Figure 14-78 shows the model with the edge rip, rip connect, and bend features.

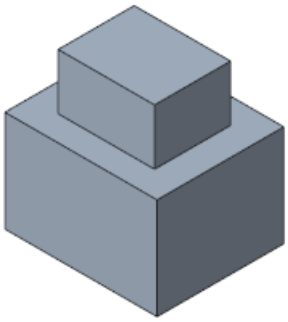

Figure 14-77 *The solid model after being converted into a sheetmetal component*

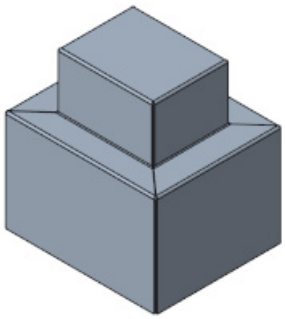

Figure 14-78 *Model with the edge rip, rip connect, and bend features*

CREATING CUTS IN THE SHEETMETAL COMPONENT

The process of creating cuts in a sheetmetal component is similar to the one followed to create cuts in a solid model. The **Extruded Cut** tool in the **Engineering** group of the **Sheetmetal** tab and the **Extrude** tool in the **Shapes** group of the **Model** tab can be used to create cuts in a sheetmetal component.

Extruded Cut

Ribbon: Sheetmetal > Engineering > Extruded Cut

Choose the **Extruded Cut** tool from the **Engineering** group to invoke the **Extruded Cut** dashboard, as shown in Figure 14-79.

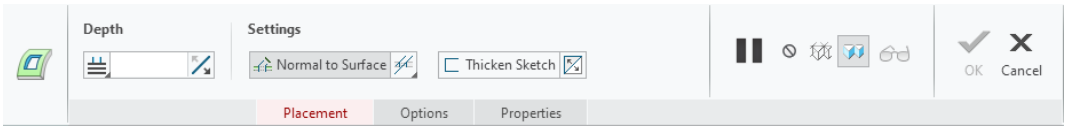

Figure 14-79 *Partial view of the* ***Extruded Cut*** *dashboard*

This option is only activated when you have created a primary wall in your design. The options in the **Extruded Cut** dashboard have the same functionality as the **Extrude** dashboard discussed in earlier chapters.

The cut features in sheetmetal components are created with reference to the driving surface or the offset surface. Driving surface is the surface on which you create the base feature. When you invoke the **Extruded Cut** dashboard, the **Normal to Surface** button is chosen by default. There are three options through which you can create cuts in a sheetmetal component.

Normal to Both Surfaces

This button, if chosen, removes material normal to both the driving and offset surfaces.

Normal to Driving Surface

This button, if chosen, removes material normal to the driving surface. This button is chosen by default.

Normal to Offset Surface

This button, if chosen, removes material normal to the offset surface.

CREATING THE FLAT PATTERN

Enhanced

The **Flat Pattern** tool is equivalent to the **Unbend** feature. This feature flattens any curved surface, whether it is a bend feature or a wall. But the most distinctive characteristic of the **Flat Pattern** tool is that it automatically places itself at the end of the **Model Tree** to maintain the flat model view. If new features are added to your design, the flat pattern is suppressed but is automatically resumed after the features are added. If you do not want to flip between the flat pattern and the solid views for each new feature, manually suppress and resume the flat pattern as required. You can create a flat pattern at any point in your design because of the property that the feature jumps to the end of the **Model Tree** to maintain the flat model view.

Note

You can create only one flat pattern per part. Once you create a flat pattern, this option is disabled.

To create a flat pattern, choose **Sheetmetal > Bends > Flat Pattern** from the **Ribbon**; the **Flat Pattern** dashboard will be displayed, as shown in Figure 14-80. Note that when you invoke this dashboard, the surface created first gets selected automatically. To change the selection, right-click in the **Fixed geometry** collector and choose the **Remove** option from the shortcut menu.

Figure 14-80 *Partial view of the* ***Flat Pattern*** *dashboard*

Figure 14-81 shows a sheetmetal component chosen to create the flat pattern. Select the primary wall surface that needs to remain fixed. The model after using the **Flat Pattern** tool is shown in Figure 14-82.

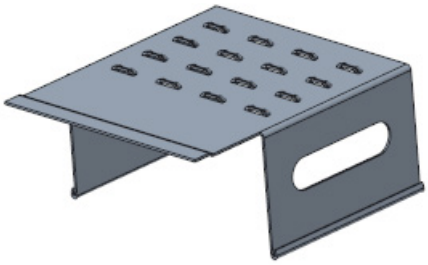

Figure 14-81 *Model for creating the flat pattern*

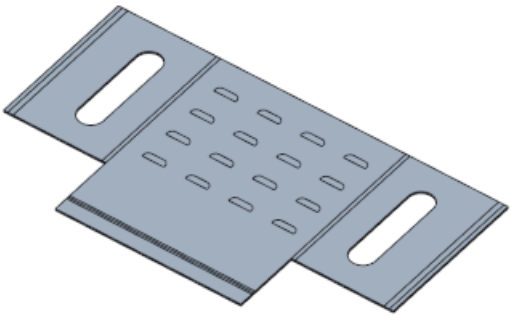

Figure 14-82 *Model after creating the flat pattern*

Tip

You can choose the ***Flat Pattern Preview*** *button ( ) from the* ***Graphics*** *toolbar to preview the flat sheet. On choosing this button, the* ***Flat Pattern Preview*** *window will be displayed. You can also preview the dimensions of the flat pattern by choosing the* ***Bounding Box*** *button displayed in the window.*

TUTORIALS

Tutorial 1

In this tutorial, you will create the sheetmetal component of the Holder Clip shown in Figure 14-83. The flat pattern of the component is shown in Figure 14-84. The dimensions are shown in Figure 14-85. The thickness of the sheet is 1 mm. After creating the sheetmetal component, create its flat pattern. **(Expected time: 45 min)**

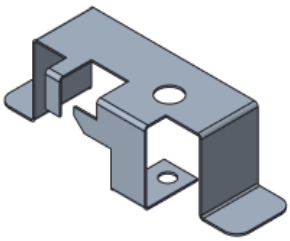

Figure 14-83 *Model for Tutorial 1*

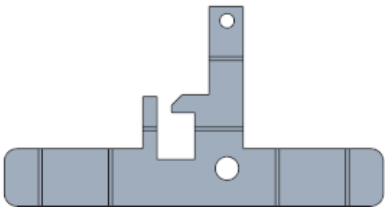

Figure 14-84 *The flat pattern of the component*

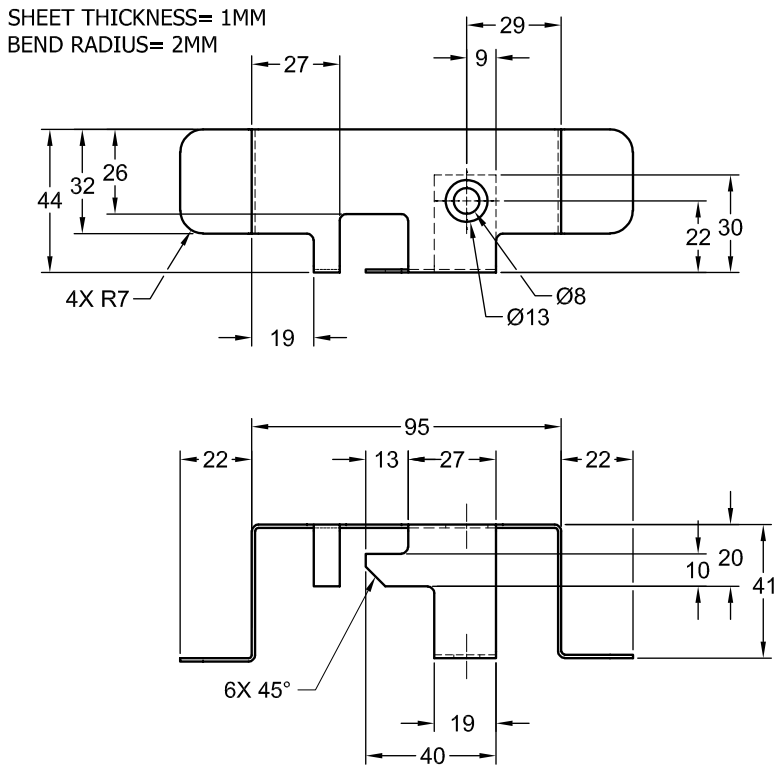

Figure 14-85 *Top and front views of the Holder Clip*

The following steps are required to complete this tutorial:

a. Create the base feature.
b. Create the flange walls on the right and left edges of the base wall.
c. Create the next flange wall on the front edge of the base wall. Next, create a cut feature on it.
d. Create a flat wall attached to the flange wall created in the previous step.
e. Create the next flange wall.
f. Create the next flange on the other front edge of the base wall.
g. Create the round feature and the chamfer feature.
h. Create the hole features on the top and bottom walls.
i. Create the flat pattern of the model.

Starting a New Object File

1. Start a new file in the **Part** mode and select **Sheetmetal** from the **Sub-type** area. Next, enter **c14tut1** in the **Name** edit box.

2. Set the template to **mmns_part_sheetmetal_abs**.

Creating the Base Wall

1. Choose the **Planar** tool from the **Walls** group; the **Planar** dashboard is displayed and you are prompted to select a closed sketch.

2. Choose the **References** tab from the **Planar** dashboard to display a slide-down panel and then choose the **Define** button from the slide-down panel; the **Sketch** dialog box is displayed and you are prompted to select a sketching plane.

3. Select the **TOP** datum plane from the drawing area and then choose the **Sketch** button from the **Sketch** dialog box.

4. Draw the sketch for the base wall, as shown in Figure 14-86, and then choose the **OK** button to exit the sketcher environment.

5. Enter **1** in the **Thickness** edit box of the **Planar** dashboard and choose the **OK** button from the dashboard to complete the creation of the feature. The model similar to the one shown in Figure 14-87 is displayed in the drawing area.

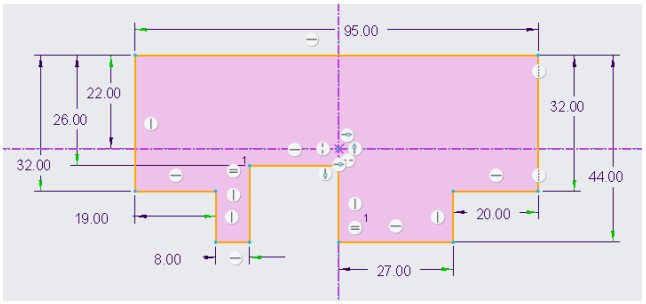

Figure 14-86 *The sketch for the base wall*

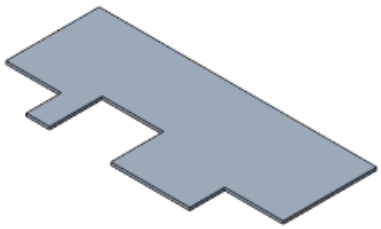

Figure 14-87 *Isometric view of the model*

Creating the First Flange Wall

1. Choose the **Flange** tool from the **Walls** group; the **Flange** dashboard is displayed and you are prompted to select the edge to attach the wall.

2. Select the right edge of the base wall, as shown in Figure 14-88; the preview of the flange wall is displayed in the drawing area. The **I** profile is selected by default in the selection box above the **Placement** tab in the **Flange** dashboard. The dimension, indicating the bend radius at the attachment edge, is also displayed in the drawing area. The default value of radius is selected as **Thickness**, which is dimensioned from the inner surface of the bend.

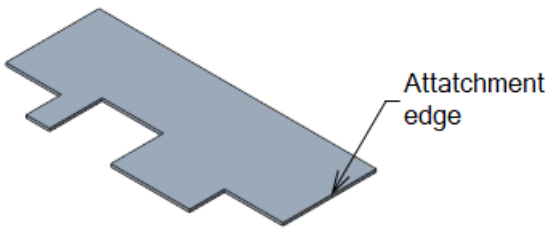

Figure 14-88 *The attachment edge for the flange wall*

3. Choose the **Shape** tab from the **Flange** dashboard to display the slide-down panel and click on **Section Preview** then double-click on the default height value in the slide-down panel. Next, enter **41**. The angle at which the wall is created with respect to the base wall is selected as 90-degree by default. You can also drag the handles and adjust the values dynamically.

Alternatively, double-click on the values displayed on the model; the edit boxes will be displayed where you can enter new values as per your requirement.

4. Choose the **Dimension the outer surface of the bend** button from the **Flange** dashboard and enter **2** in the edit box; the preview of the wall is displayed in the drawing area.

5. Choose the **OK** button from the **Flange** dashboard to complete the creation of the wall; the model similar to the one shown in Figure 14-89 is displayed in the drawing area.

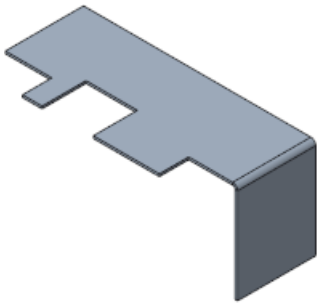

Figure 14-89 *Model with the flange wall*

Creating the Next Flange Wall

1. Select the attachment edge, which is the inner edge of the previously created flange wall, as shown in Figure 14-90, and create a flange wall as discussed earlier, with **22** as its height value and **2** as its radius value. The model similar to the one shown in Figure 14-91 is displayed in the drawing area.

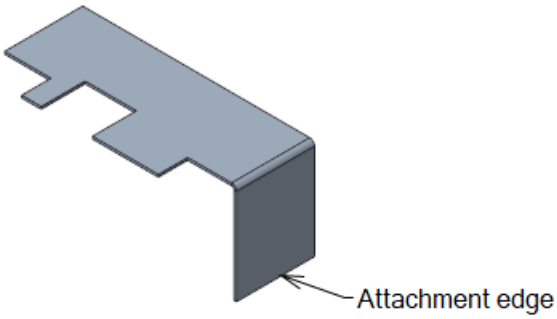

Figure 14-90 *The attachment edge chosen for the flange wall*

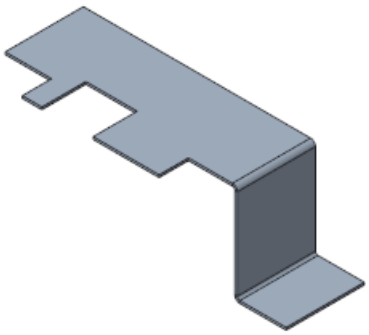

Figure 14-91 *Model with the flange wall*

Creating the Flange Walls on the Left Edge of the Base Wall

1. Create the flange walls on the left edge of the base wall by following the similar procedure that you used for creating the flange walls on the right edge. The model after creating the flange walls on the left edge of the base wall is shown in Figure 14-92. You can also mirror the left side flange walls about the **RIGHT** plane.

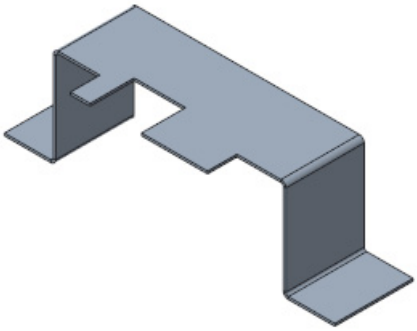

Figure 14-92 *Model after creating the flange wall on the left edge*

Creating Next Flat Wall on the Front Edge of the Base Wall

1. Choose the **Flat** tool from the **Walls** group; the **Flat** dashboard is displayed and you are prompted to select the edge to attach the wall.

2. Select the front edge of the base wall, as shown in Figure 14-93; the preview of the flat wall is displayed in the drawing area.

3. Choose the **Shape** tab to display the slide-down panel and click on the **Sketch** option. Draw the sketch for the flat feature, as shown in Figure 14-94.

4. Exit the sketcher environment. The angle at which the wall is created with respect to the base wall is selected as 90-degree by default.

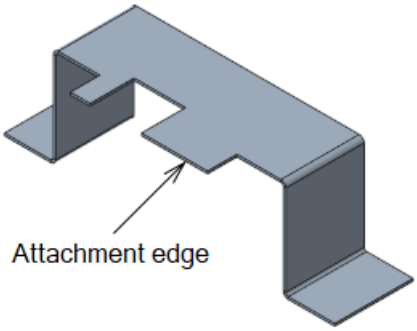

Figure 14-93 *The attachment edge for the flat wall*

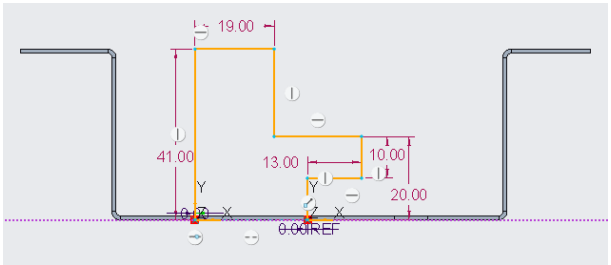

Figure 14-94 *The sketch for the flat feature*

5. Choose the **Dimension the outer surface of the bend** button from the **Flat** dashboard and enter the value **2** in the edit box. The preview of the flat wall is displayed in the drawing area.

6. Choose the **OK** button from the **Flat** dashboard; the model similar to the one shown in Figure 14-95 is displayed in the drawing area.

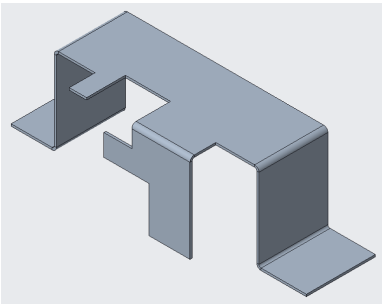

Figure 14-95 *Model after creating the flat feature*

Creating the Next Flange Wall

1. Choose the **Flange** tool from the **Walls** group; the **Flange** dashboard is displayed and you are prompted to select the attachment edge to create the wall.

2. Select the attachment edge, as shown in the Figure 14-96; the preview of the flange wall is displayed in the drawing area.

3. Choose the **Shape** tab from the **Flange Wall** dashboard to display the slide-down panel. Specify **30** as the value for the height of the wall in the edit box in the slide-down panel. The angle at which the wall is created with respect to the front flange wall is selected as 90-degree by default.

4. Enter **2** as the dimension for creating the bend at the attachment edge which is dimensioned from the outer surface of the bend.

5. Choose the **OK** button from the **Flange** dashboard to complete the creation of the feature. The model similar to the one shown in Figure 14-97 is displayed in the drawing area.

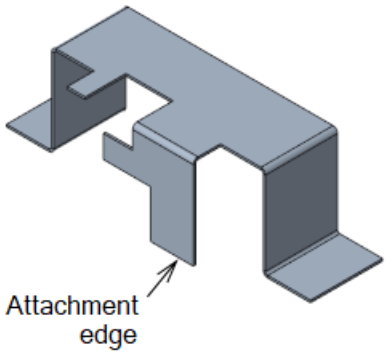

Figure 14-96 *The attachment edge for the flange wall*

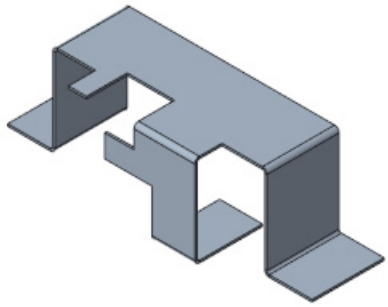

Figure 14-97 *Model showing the flange wall*

Creating the Next Flange Wall on the Front Edge of the Base Wall

1. Create the next flange wall on the front edge of the base wall by selecting the attachment edge, as shown in Figure 14-98, and specifying the height of the wall as **19**. The model similar to the one shown in Figure 14-99 is displayed in the drawing area.

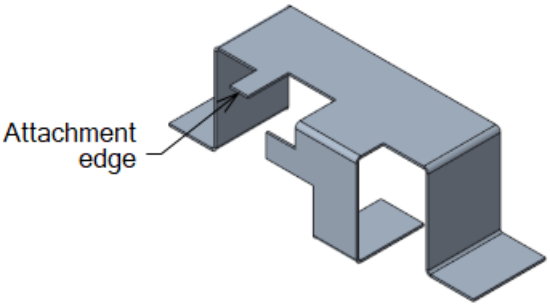

Figure 14-98 *The attachment edge for the flange wall*

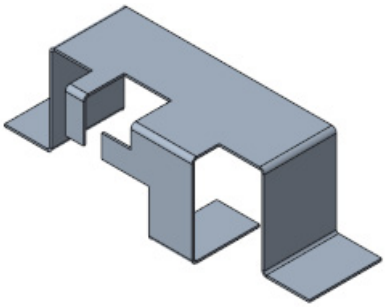

Figure 14-99 *Model showing the flange wall on the front edge of the base wall*

Creating the Round and Chamfer Features

1. Create the rounds with radius 7, as shown in Figure 14-100, using the **Round** tool available in the **Engineering** group.

2. Create the edge chamfer, as shown in Figure 14-101, using the **Edge Chamfer** tool available in the **Engineering** group. For dimensions of the edge chamfer, refer to Figure 14-85.

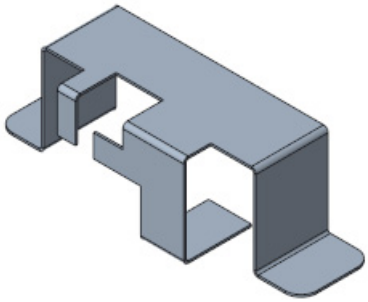

Figure 14-100 *Model after creating the round feature*

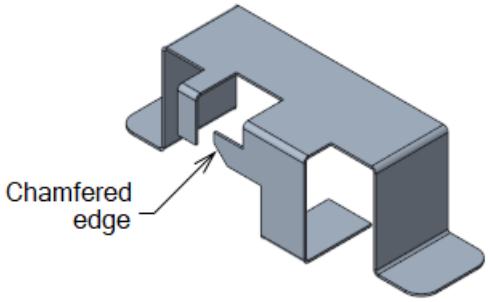

Figure 14-101 *Model after creating the chamfer feature*

Creating the Hole Features on the Top and Bottom Walls

1. Choose the **Hole** tool from the **Engineering** group of the **Ribbon**; the **Hole** dashboard is displayed.

2. Select the top surface of the base wall and specify the placement parameters for the hole having diameter 13, refer to Figure 14-85.

3. Choose the **OK** button from the **Hole** dashboard to exit it. The model after creating the hole feature on the top surface of the base wall is shown in Figure 14-102.

4. Similarly, create the hole feature on the bottom flange wall by specifying the placement parameters, refer to Figure 14-85. The model after creating the hole feature on the bottom flange wall is shown in Figure 14-103.

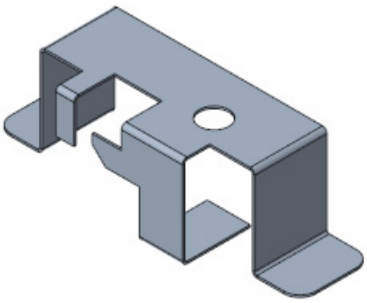

Figure 14-102 *Model with the hole feature on the base wall*

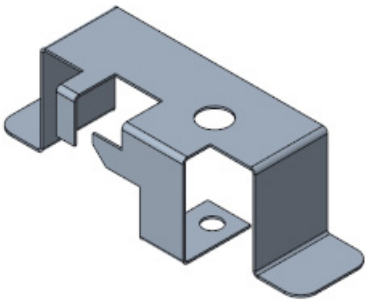

Figure 14-103 *Model with the hole feature on the bottom flange wall*

Creating the Flat Pattern of the Model

1. Choose the **Flat Pattern** button from the **Bends** group; the flat pattern of the model is created with the 3D notes.

2. To clear the 3D notes, choose **Annotation Display Filter > Annotation Display** from the **Graphics** toolbar. The flat pattern of the model is displayed, as shown in Figure 14-104.

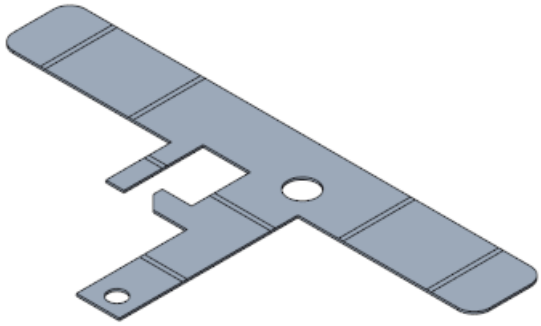

Figure 14-104 *Model after creating the flat pattern*

Saving the Model

1. Choose the **Save** button from the **Quick Access** toolbar to save the model.

Tutorial 2

In this tutorial, you will create the sheetmetal component shown in Figure 14-105. The flat pattern of the component is shown in Figure 14-106. The dimensions are shown in Figure 14-107. The thickness of the sheet is 1 mm, Bend Radius is 1 mm, Relief Type is Rectangular, and width value is equal to thickness. After creating the sheetmetal component, create its flat pattern.

(Expected time: 45 min)

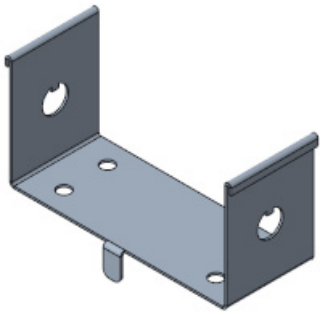

Figure 14-105 *Model for Tutorial 2*

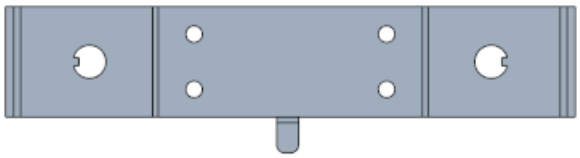

Figure 14-106 *Top view of the model*

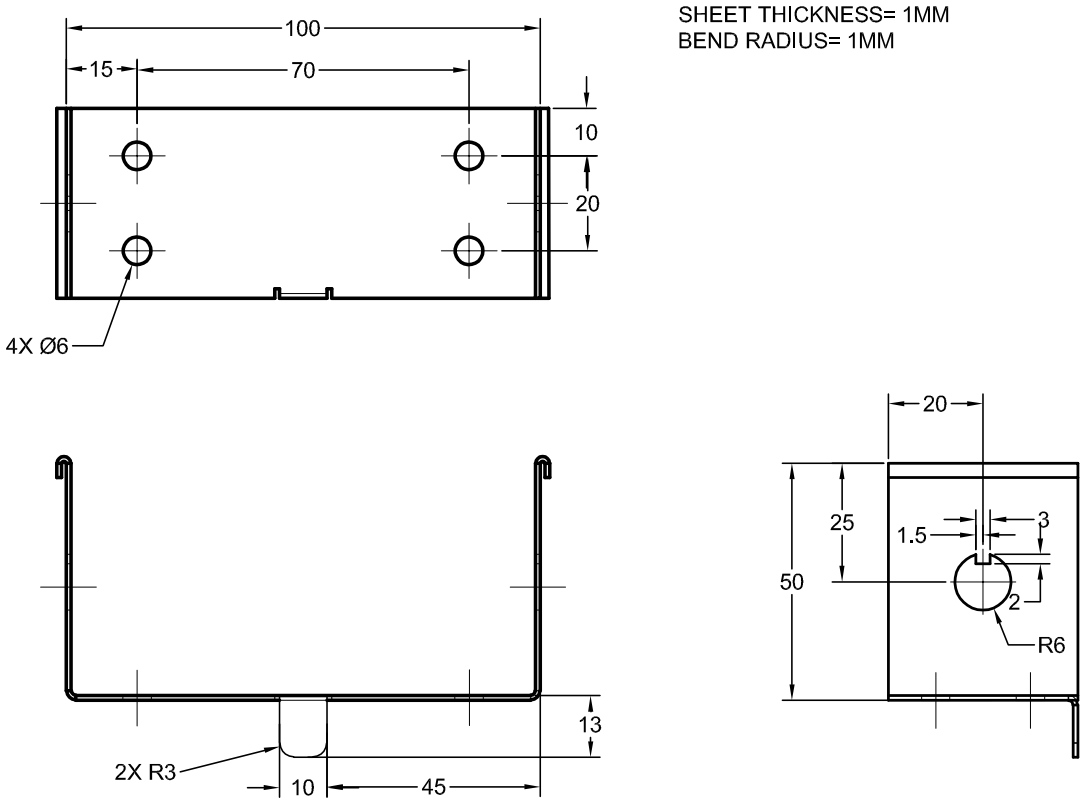

Figure 14-107 *Orthographic views of the model*

The following steps are required to complete this tutorial:

a. Create the base feature.
b. Create the hole feature on the top surface of the base wall.
c. Create a flange wall on the right edge of the base wall.
d. Create the cut feature.
e. Create the next flange wall attached to the wall created previously.
f. Create the two flange walls along with the cut feature on the left side of the base wall as created previously.
g. Create the flat wall on the front edge of the base wall.
h. Create the flat pattern of the component.

If required, set the working directory to *C:\Creo-8.0\c14*.

Starting a New Object File

1. Start a new file in the **Sheetmetal** mode and name it as *c14tut2*.

2. Set the template to **mmns_part_sheetmetal_abs**.

Creating the Base Wall

1. Choose the **Planar** tool from the **Walls** group; the **Planar** dashboard is displayed and you are prompted to select a closed sketch.

2. Choose the **References** tab from the **Planar** dashboard to display the slide-down panel. Choose the **Define** button from the slide-down panel; the **Sketch** dialog box is displayed and you are prompted to select a sketching plane.

3. Select the **TOP** datum plane from the drawing area and choose the **Sketch** button from the **Sketch** dialog box.

4. Draw the sketch for the base wall, as shown in Figure 14-108, and choose the **OK** button to exit the sketcher environment.

5. Enter the value **1** in the **Thickness** edit box in the **Planar** dashboard and choose the **OK** button from the dashboard to complete the creation of the feature. The model similar to the one shown in Figure 14-109 is displayed in the drawing area.

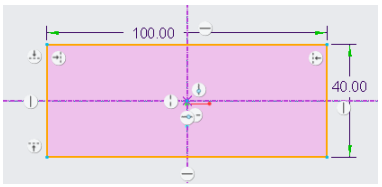

Figure 14-108 *The sketch for the base wall*

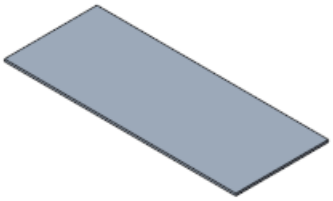

Figure 14-109 *Model of the base wall*

Creating the Hole Feature

1. Create a hole on the lower right corner of the base wall, as shown in Figure 14-110, by specifying the dimensions shown in Figure 14-107.

Creating the Pattern of the Hole Feature

1. Create the rectangular pattern of the hole, as shown in Figure 14-111.

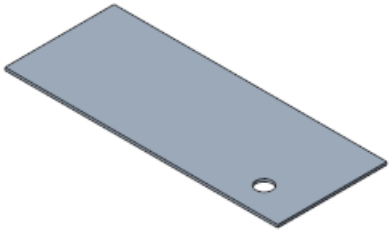

Figure 14-110 *Model after creating the hole feature*

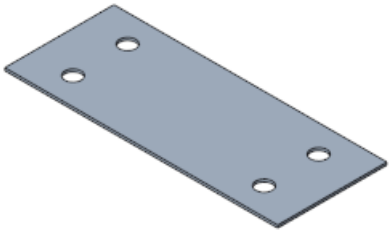

Figure 14-111 *Model after creating the pattern of the hole feature*

Creating the First Flange Wall

1. Choose the **Flange** tool from the **Walls** group; the **Flange** dashboard is displayed and you are prompted to select the edge to attach the wall.

2. Select the right edge of the base wall; preview of the flange wall is displayed in the drawing area.

3. Choose the **Shape** tab from the **Flange** dashboard to display the slide-down panel and click on **Section Preview** then specify **50** as the value for the height of the wall in the edit box.

4. Choose the **Dimension the outer surface of the bend** button from the **Flange** dashboard and enter **2** as the value in the edit box; the preview of the wall is displayed in the drawing area.

5. Choose the **OK** button from the **Flange** dashboard to complete the creation of the wall. Figure 14-112 shows the model after creating the flange wall.

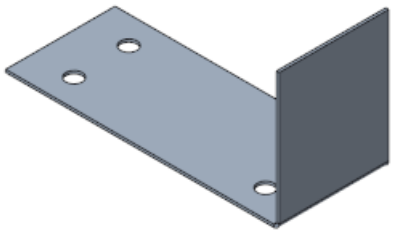

Figure 14-112 *Model with the flange wall*

Creating the Extruded Cut Feature

1. Choose the **Extruded Cut** tool from the **Engineering** group and select the front face of the flange wall as the sketching plane.

2. Draw the sketch for the cut feature on the front face of the previous flange wall, as shown in Figure 14-113.

3. Extrude the sketch through all faces of the model to create the cut feature, as shown in Figure 14-114.

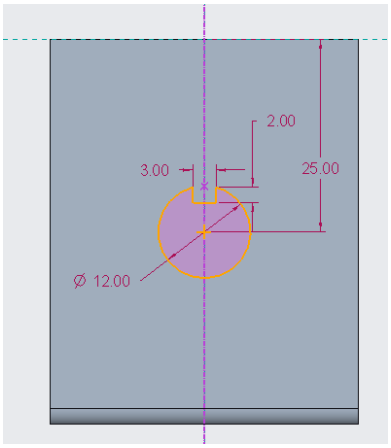

Figure 14-113 *The sketch for the* ***Extruded Cut*** *feature*

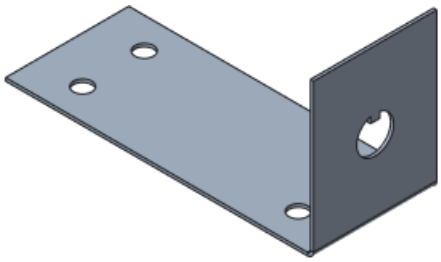

Figure 14-114 *Model with the* ***Extruded cut*** *feature*

Creating the Next Flange Wall

1. Choose the **Flange** tool from the **Walls** group; the **Flange** dashboard is displayed and you are prompted to select the edge to attach the wall.

2. Select the attachment edge, as shown in Figure 14-115; the preview of the flange wall is displayed in the drawing area.

3. Select the **Open** option from the **Wall profile** drop-down list in the dashboard; the preview of the wall is displayed in the drawing area.

4. Accept the default parameters in the **Shape** slide-down panel and choose the **OK** button from the **Flange** dashboard to complete the creation of the wall.

Figure 14-116 shows the model with the flange wall.

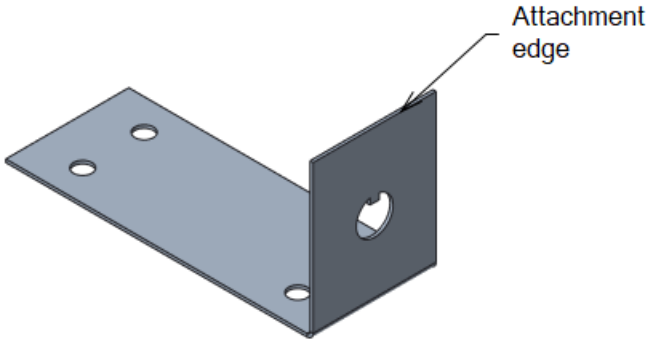

Figure 14-115 *The attachment edge for the flange wall*

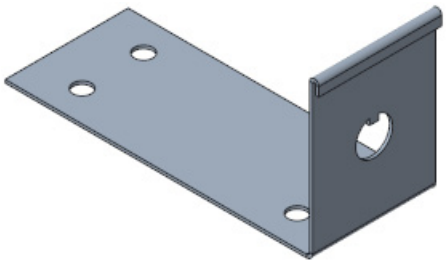

Figure 14-116 *Model with the flange wall*

Creating the Flange Walls on the Left Edge of the Base Wall

1. Create the flange walls on the left edge of the base wall by following the same procedure that was used for creating the first two flange walls on the right edge of the base wall, refer to Figure 14-117. You can also mirror the flange walls with respect to the RIGHT plane.

Creating the Cut Feature on the Left Flange Wall

1. Create the cut feature on the left flange wall by following the procedure used for creating the cut on the right flange wall. The model after creating the cut feature is shown in Figure 14-117.

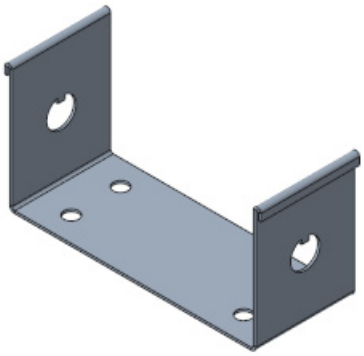

Figure 14-117 *Model after creating the flange walls on the left edge of the base wall and the cut feature on the left flange wall*

Creating the Flat Wall

1. Choose the **Flat** tool from the **Walls** group; the **Flat** dashboard is displayed and you are prompted to select the attachment edge to create the wall.

2. Select the front edge of the base wall; the **Rectangle** profile of the wall is chosen by default and the preview of the wall is displayed in the drawing area.

3. Choose the **Rectangle** option from the dashboard; a flyout is displayed. Choose the **User Defined** option from the flyout.

4. Choose the **Shape** tab from the **Flat** dashboard to display the slide-down panel and click on **Section Preview**. Choose the **Sketch** button from the slide-down panel; the **Sketch** dialog box is displayed.

5. Orient the model such that the top face of the base wall is at the top and draw the sketch for the user-defined flat wall, as shown in Figure 14-118. Note that the sketch drawn should be open at the top. Choose the **OK** button to exit the sketcher environment.

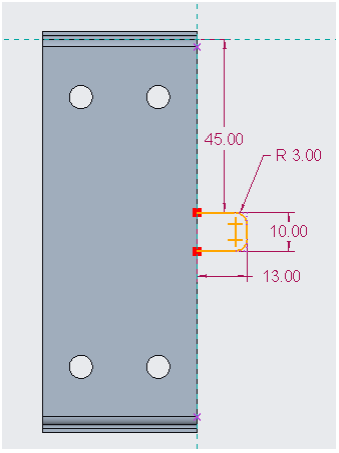

Figure 14-118 *The sketch for the flat wall*

6. Choose the **Relief** tab from the **Flat** dashboard to display the slide-down panel and then select the **Rectangular** option from the **Type** drop-down list. Accept the default parameters for the relief. You may need to choose the **Flip** button to flip the direction.

7. Choose the **OK** button from the **Flat** dashboard to complete the creation of the flat wall.

8. Create a bend feature on the flat wall, refer to Figure 14-107. The model similar to the one shown in Figure 14-119 is displayed in the drawing area.

Creating the Flat Pattern of the Model

1. Choose the **Flat Pattern** tool from the **Bends** group; the flat pattern of the model is created and the model similar to the one shown in Figure 14-120 is displayed in the drawing area.

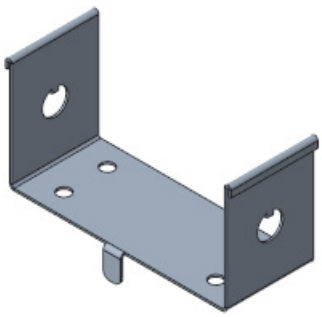

Figure 14-119 *Model after creating the flat wall*

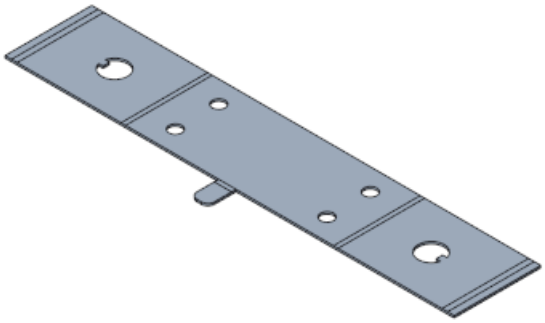

Figure 14-120 *Model after creating the flat pattern*

Saving the Model

1. Choose the **Save** button from the **Quick Access** toolbar to save the model.

Self-Evaluation Test

Answer the following questions and then compare them to those given at the end of this chapter:

1. _____, _____, and _____ are three different types of unattached blend walls.

2. The _____ in a sheetmetal component control the material behavior and prevent the unwanted deformation.

3. In the **Sheetmetal** environment of Creo Parametric, the _____ wall can be a primary or a secondary wall.

4. The _____ tool can be used to lengthen an existing wall.

5. The _____ is a reference point for calculating the developed length and creating the bend geometry.

6. The _____ option flattens any curved surface whether it is a bend feature or a curved wall.

7. A _____ feature can be defined as a zero-volume cut.

8. In the **Sheetmetal** design of Creo Parametric, the walls can be categorized into two types. (T/F)

9. Flat walls are a type of unattached walls in the **Sheetmetal** environment of Creo Parametric. (T/F)

10. The rotational blend walls have sections that can be rotated about the Y-axis upto a maximum angle of 90 degrees. (T/F)

Review Questions

Answer the following questions:

1. While creating an unattached blend wall, the _____ option is used to connect vertices of all sections in the blend feature with straight lines.

2. Parallel blends have sections that are drawn_____ to each other.

3. While creating a flange wall, the _____ tab is used to specify the dimensions of the predefined wall profiles.

4. The _____ feature bends back only unbent features.

5. The _____feature is defined as a zero volume cut that tears or shears the sheetmetal walls.

6. To convert a solid model into a sheetmetal component, you first need to _____ the solid model.

7. If the rotational blend angle between two sections is equal to 0-degree, then the rotational blend option functions in the same way as the parallel blend option. (T/F)

8. The bend feature can be created on the area that was previously bent. (T/F)

9. The flat pattern can be created only once on a sheetmetal component. (T/F)

10. The **Extruded Cut** tool is used to create a cut on a sheetmetal component. (T/F)

EXERCISES

Exercise 1

Create the sheetmetal component shown in Figure 14-121. The flat pattern of the component is shown in Figure 14-122. The dimensions of the model are shown in Figure 14-123.

(Expected time: 30 min)

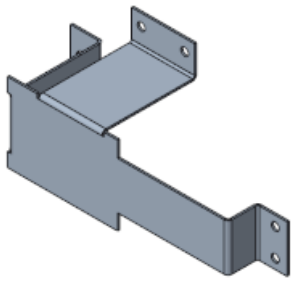

Figure 14-121 *Model for Exercise 1*

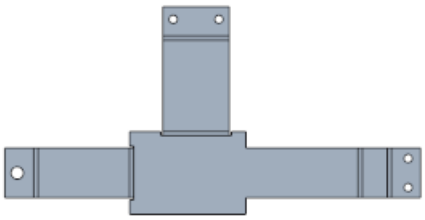

Figure 14-122 *Flat pattern of the component*

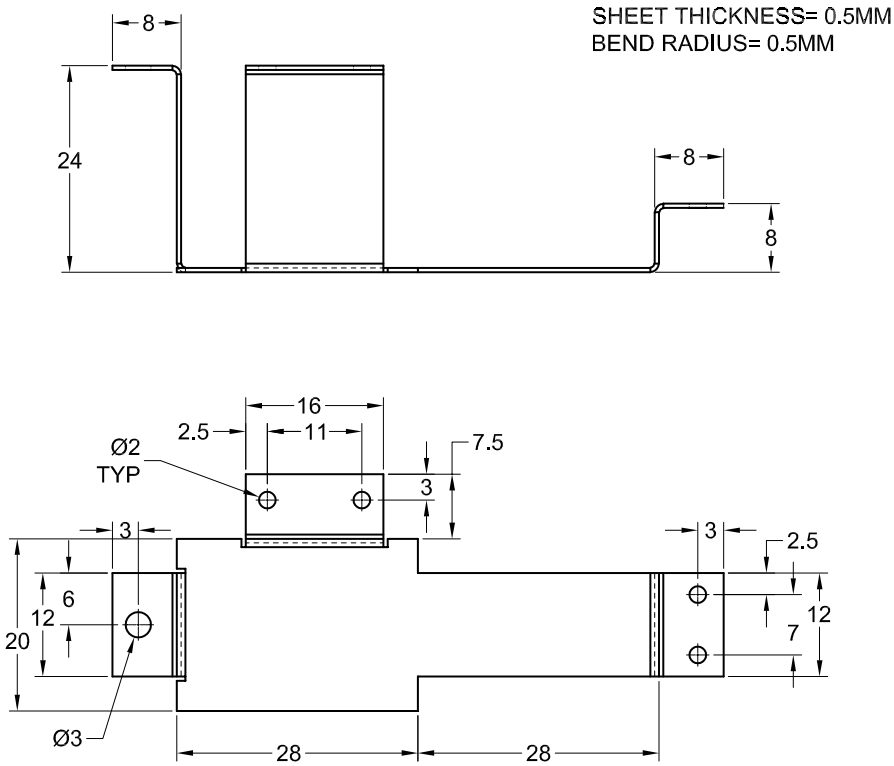

Figure 14-123 *Orthographic view of the component*

Exercise 2

In this exercise, you will create the sheetmetal component shown in Figure 14-124. The flat pattern of the component is shown in Figure 14-125. The dimensions of the model are shown in Figure 14-126. **(Expected time: 30 min)**

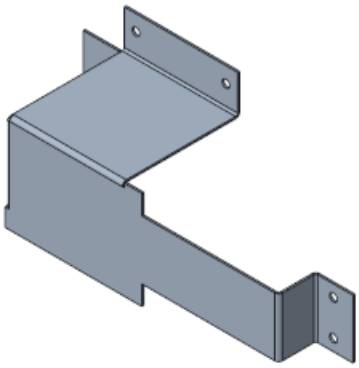

Figure 14-124 *Sheetmetal part for Exercise*

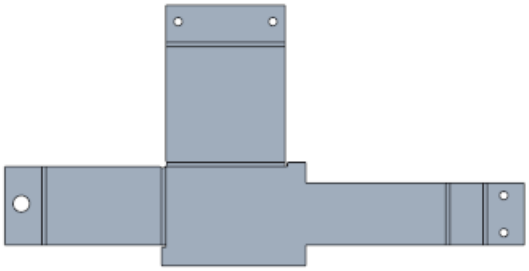

Figure 14-125 *Flat pattern of the part*

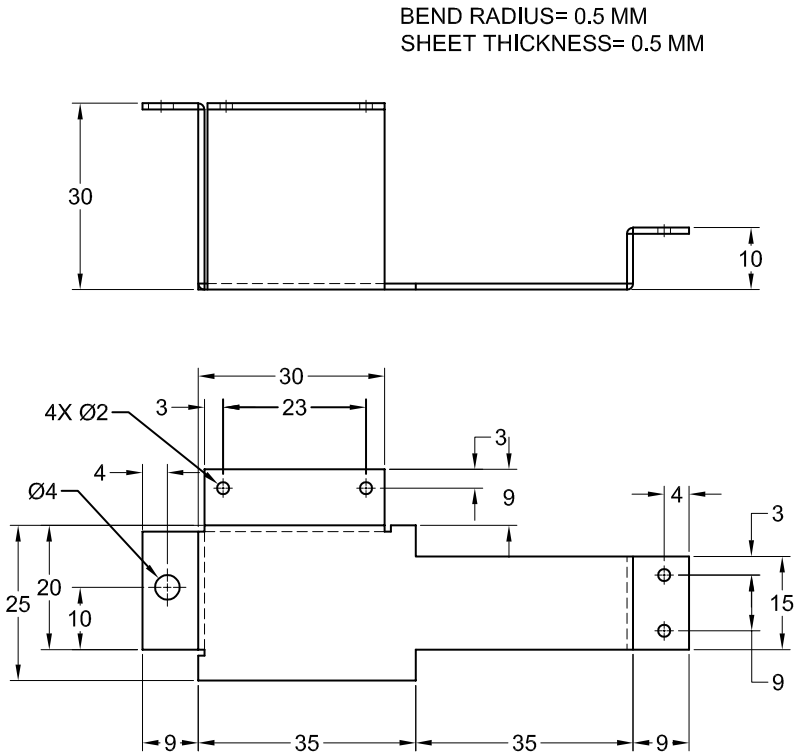

Figure 14-126 *Dimensions of the sheetmetal part*

Answers to Self-Evaluation Test

1. Parallel, Rotational, General, **2.** reliefs, **3.** flat, **4. Extend**, **5.** bend line, **6. Flat Pattern**, **7. Rip**, **8.** T, **9.** T, **10.** F